SL-T30ME
RMT-218

SERVICE MANUAL

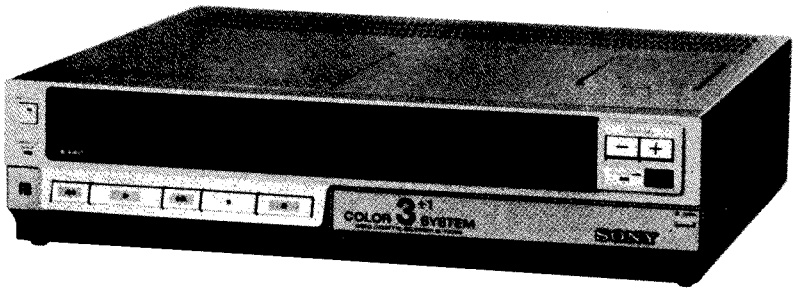

September, 1983

711B CHASSIS

Refer to separate adjustment manual, part number 9-972-269-81

SPECIFICATIONS

System

Video recording system	Rotary two-head helical scanning
Video signal	CCIR standards, PAL and SECAM colour EIA standards, NTSC4.43 colour (playback only)
Aerial input	75-ohm, asymmetrical aerial socket
Channel coverage	VHF: Western European channels E2-12 UHF: Western European channels E21-68 (Up to 8 programmes can be preset.)
RF output signal	UHF channels E30 to E39 (variable) 75 ohms, unbalanced

Video

Input	VIDEO IN: BNC connector 1.0 V $^{+1.0}_{-0.5}$ V (p-p) 75 ohms, unbalanced, sync negative
Output	VIDEO OUT: BNC connector 1.0 V (p-p) ±0.1 V (p-p) 75 ohms, unbalanced, sync negative
Horizontal resolution	260 lines
Signal-to-noise ratio	Colour: Better than 40 dB B/W: Better than 43 dB

Audio

Input	AUDIO IN: phono jack 47 kilohms, −10 dBs (0 dBs = 0.775 V rms)
Output	AUDIO OUT: phono jack Load impedance less than 10 kilohms −10 dBs with 47 kilohms load, unbalanced
Frequency response	50 Hz to 10 kHz
Signal-to-noise ratio	40 dB
Audio distortion	Less than 4% at 400 Hz

Tape transport

Tape speed	PAL, SECAM 18.73 mm/sec. NTSC4.43 (playback only) 20 mm/sec. ( ) 13.3 mm/sec. ( )
Maximum recording time	2 hours 10 min. (with Sony L-500 cassette) 3 hours 15 min. (with L-750)
Fast forward/rewind time	Under 4 min. (with L-500)

Timer

Clock	Crystal lock
Time indication	24-hour cycle
Timer setting	Only for recording 2 events/week, adjustable for any day or for all 7 days of the week
Power back-up	Back-up duration of 5 minutes at one time

General

Power requirements	110–240 V ac ±10%, 50/60 Hz
Power consumption	38 W
Storage temperature	−20°C to +65°C (−4°F to +149°F)
Operating temperature	5°C to 40°C (41°F to 104°F)
Dimensions	Approx. 430 × 105 × 392 mm (w/h/d) (17 × 4 1/4 × 15 1/2 inches) including projecting parts and controls
Weight	Approx. 9.4 kg (20 lbs 12 oz) net

— Continued on next page —

Beta
VIDEO CASSETTE RECORDER

SONY®

MICROFILM

Consumer VIDEO

Accessories supplied

75-ohm coaxial cable for recorder to TV connection 1
Remote Commander RMT-218 with two IEC designation R6 batteries 1
Screwdriver for RF channel adjustment 1
Dust cover 1
Demonstration cassette 1

Design and specifications subject to change without notice.

SAFETY-RELATED COMPONENT WARNING!!

COMPONENTS IDENTIFIED BY SHADING AND MARK ⚠ ON THE SCHEMATIC DIAGRAMS, EXPLODED VIEWS AND IN THE PARTS LIST ARE CRITICAL TO SAFE OPERATION. REPLACE THESE COMPONENTS WITH SONY PARTS WHOSE PART NUMBERS APPEAR AS SHOWN IN THIS MANUAL OR IN SUPPLEMENTS PUBLISHED BY SONY. CIRCUIT ADJUSTMENTS THAT ARE CRITICAL TO SAFE OPERATION ARE IDENTIFIED IN THIS MANUAL. FOLLOW THESE PROCEDURES WHENEVER CRITICAL COMPONENTS ARE REPLACED OR IMPROPER OPERATION IS SUSPECTED.

TABLE OF CONTENTS

1. GENERAL

1-1. PRECAUTIONS 3
1-2. LOCATION AND FUNCTION OF CONTROLS 4
1-3. CONNECTIONS 6
1-4. ADJUSTING THE TV 7
1-5. TV STATION PRESETTING 8
1-6. CLOCK SETTING 9
1-7. TV PROGRAMME RECORDING 10
1-8. PLAY BACK 12
1-9. TIMER ACTIVATED RECORDING 14
1-10. CAMERA RECORDING 16

2. DISASSEMBLY

2-1. REMOVAL OF THE CASE AND FRONT PANEL 17
2-2. REMOVAL OF THE TM-48, TM-49 BOARDS 18
2-3. REMOVAL OF THE FU-19 BOARD 18
2-4. REMOVAL OF POWER BLOCK 19
2-5. REMOVAL OF THE RF-14 BOARD 19
2-6. REMOVAL OF FL CASSETTE COMPARTMENT ASSEMBLY 20
2-7. REMOVAL OF MECHANICAL CHASSIS BLOCK 20
2-8. REMOVAL OF REEL ASS'Y 22
2-9. REMOVAL OF THE YR-1 BOARD 22
2-10. REMOVAL OF THE SS-20 BOARD 23
2-11. REMOVAL OF THE TA-15 BOARD 23
2-12. REMOVAL OF THE SD-3 BOARD 24
2-13. REMOVAL OF THE CL-7 BOARD 24
2-14. INTERNAL VIEWS 25
2-15. BOARD ARRANGEMENT 26

DIAGRAMS

OVERALL BLOCK DIAGRAM 27
VIDEO BLOCK DIAGRAM 30
SERVO BLOCK DIAGRAM 33
SYSTEM CONTROL BLOCK DIAGRAM 35
SYSTEM CONTROL CIRCUIT AND MECHANISM BLOCK INTERFACE 37
CAPSTAN PHASE SYSTEM TIMING CHART 43
AUDIO BLOCK DIAGRAM 47
AUDIO LEVEL DIAGRAM 49
TIMER BLOCK DIAGRAM 51
SR-15 POWER BLOCK DIAGRAM 53
SR-15S POWER BLOCK DIAGRAM 55
TUNER BLOCK DIAGRAM 57
FRAME SCHEMATIC DIAGRAM 59
RF-14, YR-1 WIRING DIAGRAM 64
RF-14 SCHEMATIC DIAGRAM 67
YR-1 SCHEMATIC DIAGRAM 69
CL-7, SD-3 WIRING DIAGRAM 74
CL-7, SD-3 SCHEMATIC DIAGRAM 79
SS-20, FU-19, VR-3, CS-3, CS-4, RD-6, RD-7, TR-13, CAPSTAN MOTOR, REEL MOTOR WIRING DIAGRAM 84
CAPSTAN MOTOR, REEL MOTOR SCHEMATIC DIAGRAM 90
SS-20, FU-19, VR-3, CS-3, CS-4, RD-6, RD-7, TR-13 SCHEMATIC DIAGRAM 91
TA-15, TM-48, TM-49, N, FU-20 WIRING DIAGRAM 96
TA-15, TM-48, TM-49, N, FU-20 SCHEMATIC DIAGRAM 101
SR-15 POWER BLOCK WIRING DIAGRAM 105
SR-15 POWER BLOCK SCHEMATIC DIAGRAM 107
SR-15S POWER BLOCK WIRING DIAGRAM 109
SR-15S POWER BLOCK SCHEMATIC DIAGRAM 111
SEMICONDUCTORS 113
VHF/UHF SCHEMATIC DIAGRAM 116

4. EXPLODED VIEW

(1) FRONT PANEL AND CABINET ASSEMBLIES 117
(2) TUNER, TIMER AND POWER ASSEMBLIES 118
(3) FRONT LOADING ASSEMBLY 119
(4) REEL MOTOR ASSEMBLY 120
(5) CHASSIS ASSEMBLY (1) 121
(6) CHASSIS ASSEMBLY (2) 122
(7) DRUM AND S LOADING ASSEMBLY 123
(8) HARDWARE LIST 124

5. ELECTRICAL PARTS LIST 125

6. REMOTE COMMANDER 153

SECTION 1
GENERAL

1-1. PRECAUTIONS

On safety

- This unit operates on 110– 240 V ac, 50/60 Hz. No voltage adjustment is necessary.
- Should any solid object or liquid fall into the cabinet, turn off the unit and have it checked by qualified personnel before operating it any further.
- To disconnect the mains lead (ac power cord), pull it out by the plug. Never pull the lead itself.

On installation

- Allow adequate air circulation to prevent internal heat build-up. Do not place the unit on surfaces (rugs, blankets, etc.) or near materials (curtains, draperies) that may block the ventilation grille.
- Do not install the unit near heat sources such as radiators or air ducts or in a place subject to direct sunlight, excessive dust, mechanical vibration or shock.
- The unit is designed for operation in a horizontal position. Do not install it in an inclined position.
- Keep the unit and cassette tapes away from equipment with strong magnets, such as a microwave oven, large loudspeakers, etc.
- Do not place a heavy object on the cassette compartment window.
- Do not install the unit near an AM receiver, since a noise may be heard when listening to the AM programme.

On operation

- When the unit is not to be used for a long period, turn the power off to conserve energy and to extend the useful life of your unit.
- Remove and store video cassettes after recording or playback.
- This unit should not be operated for two hours after being transported from a cold to a hot environment to avoid condensation from forming on the head drum. Condensation can cause the tape to stick to the head drum, resulting in damage to the tape.

On cleaning

Clean the cabinet, panel and controls with a dry soft cloth. Do not use a moistened cloth or any type of solvent, such as alcohol or benzine, which might damage the finish.

On repacking

Do not throw away the carton and packing materials. They make an ideal container in which to transport the unit. When shipping the unit to another location, repack it as illustrated on the carton.

On colour broadcasting systems

This machine is designed to record and playback using the PAL colour standard. Recording and playback of video sources based on other colour systems cannot be guaranteed.

If you have any questions about this unit, contact your Sony dealer.

SAFETY CHECK-OUT

After correcting the original service problem, perform the following safety checks before releasing the set to the customer:

1. Check the area of your repair for unsoldered or poorly-soldered connections. Check the entire board surface for solder splashes and bridges.
2. Check the interboard wiring to ensure that no wires are "pinched" or contact high-wattage resistors.
3. Look for unauthorized replacement parts, particularly transistors, that were installed during a previous repair. Point them out to the customer and recommend their replacement.
4. Look for parts which, though functioning, show obvious signs of deterioration. Point them out to the customer and recommend their replacement.
5. Check the B+ voltage to see it is at the values specified.

1-2. LOCATION AND FUNCTION OF CONTROLS

Front

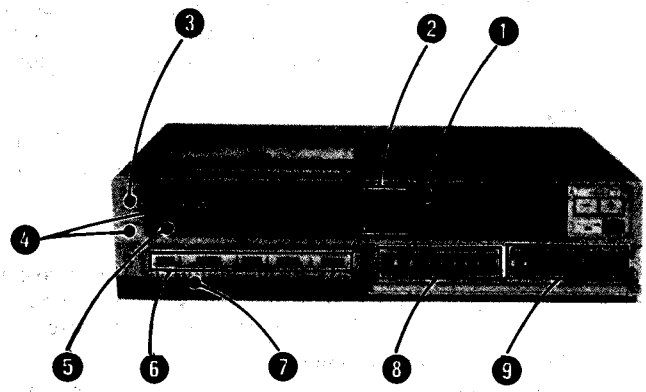

❶ REMOTE SENSOR and pilot lamp
Detects the remote control signal transmitted from the supplied Remote Commander. The pilot lamp blinks when any button on the Commander is pressed.

❷ Colour system indicators
Show the colour system of a TV programme being received or a tape being played back.

❸ ON/STANDBY button and lamp
Press to turn on the unit. The lamp will light up. Press again to turn it off.
The timer section will continue to operate and the time will be displayed even if the ON/STANDBY button is off so long as the ac power cord is connected to the wall outlet.

❹ Cassette compartment and CASSETTE INSIDE lamp
Insert a cassette after turning on the recorder. The lamp lights up when a cassette is inside.

❺ EJECT button
Press to remove the cassette. This button does not function when the recorder is turned off.

❻ Function buttons
▶ PLAY button: Press to play the tape back.
◀◀ REW button: Press to rewind the tape. Also used for the reverse picture search and skip scan operation.
▶▶ FF button: Press to advance the tape rapidly. Also used for the forward picture search and skip scan operation.
■ STOP button: Press to stop the tape.
❚❚ PAUSE button: Press to stop the tape for a moment during recording or playback. A still picture will be seen during playback. Press again to release the pause mode.

❼ TRACKING control
If streaks or snow appears during the playback of a tape recorded on another recorder, turn this knob to obtain the best possible picture.

❽ Timer setting section in the front panel compartment

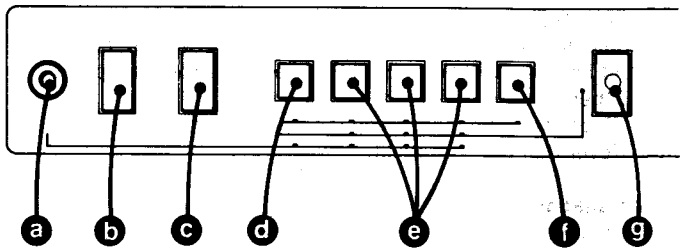

ⓐ CLOCK SET button: Press to set the clock.
ⓑ CLEAR button: Press to clear the timer programme memorized.
ⓒ TIMER SET button: Press to set the turn-on/off time of recording.
ⓓ DAY button: Press to set the turn-on day of a recording.
ⓔ HOUR, 10 MIN and MIN buttons: Press to set the turn-on/off time of a recording.
ⓕ CHANNEL button: Press to select the TV channel to be recorded by the timer.
ⓖ TIMER REC button: Press to set the recorder in the timer recording stand-by mode.

❾ Other controls and jacks in the front panel compartment

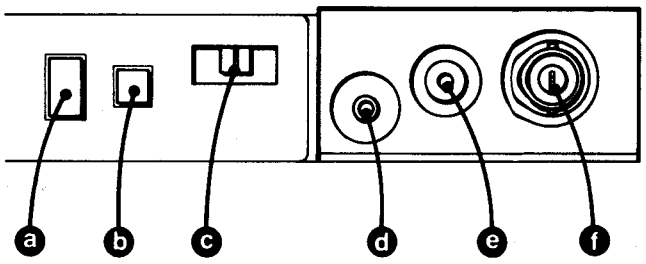

ⓐ CLOCK/COUNTER button: Press to set the display to the tape counter. To reset to clock, press it again.
ⓑ RESET button: Press to set the tape counter reading to "0000".
ⓒ COLOR SYSTEM SELECT switch: Usually set the switch to AUTO. The unit will be set to the appropriate colour system mode according to the TV programmes being received or the tape being played back. The associated indicator will light up. If the signal is too weak or has been improperly recorded so that the indicator does not function correctly or the picture on TV is distorted, manually set the switch to PAL, SECAM or NTSC.
ⓓ CAMERA PAUSE jack (special mini jack): For camera recording, connect an ac adaptor to this jack.
ⓔ AUDIO IN jack (phono type): Connect to the audio output of a camera or another video cassette recorder.
ⓕ VIDEO IN jack (BNC type): Connect to the video output of a camera, another video cassette recorder, etc.

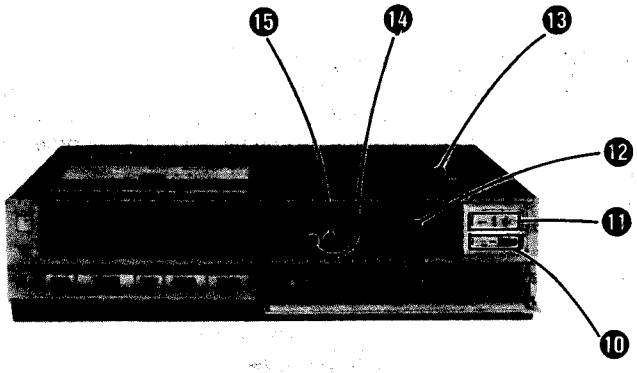

⑩ RECORD button and lamp
Press to start recording. The lamp will light up.

⑪ CHANNEL buttons
Press the + button for a higher channel number and the – button for a lower channel number. The selected channel number will appear in the display window.

⑫ Display window

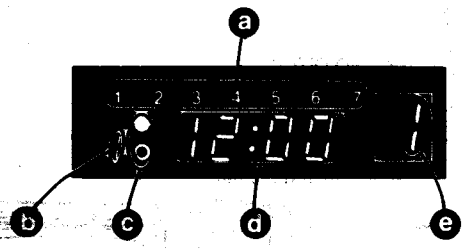

- **a Day of the week indication:** Shows the day of the week on which the timer-activated recording will take place.
- **b Event number**
- **c Turn-on and turn-off setting indications:** The "●" mark shows you are setting the turn-on time and the "O" mark shows the turn-off time.
- **d Time and counter display:** Usually shows the present time. When the CLOCK/COUNTER button is pressed to COUNTER, the display shows the counter number.
- **e Channel number:** Shows the channel number selected with the CHANNEL + or – button.

⑬ Tuning compartment

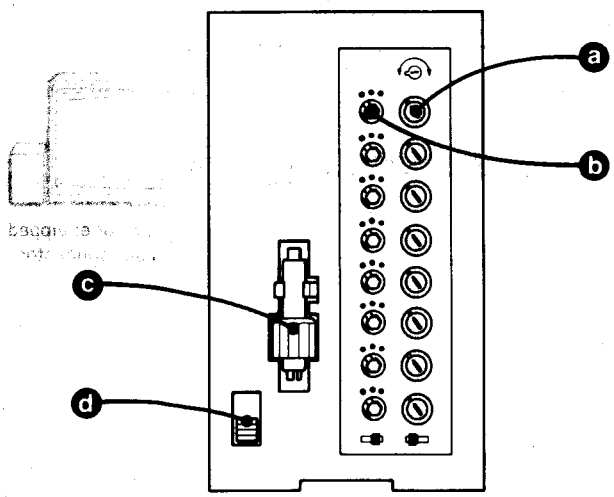

- **a Tuning control:** With the supplied tuning aid, turn until the desired station is properly tuned in.
- **b Band-select switch:** Using the supplied tuning aid, set to V_L (channels E2 through E4), V_H (channels E5 through E12), or U (channels E21 through E68) according to the channel to be tuned in.
- **c Tuning aid:** Use to select the band and to turn the tuning control. The indication at its end shows the approximate position within the selected band.
- **d AFT switch:** When presetting TV stations, set the switch to OFF. After presetting, set the switch to ON. The automatic fine tuning circuit locks in the signal and maintains a sharp picture.

⑭ Tape speed indicators (effective only for NTSC4.43)
The ▮▮ / ▮▮ indicator illuminates according to the tape speed recorded.

⑮ TIMER REC lamp
Lights when the TIMER REC button behind the front panel is pressed to set the recorder in the stand-by mode. It remains lit till the timer recording is finished.

Rear

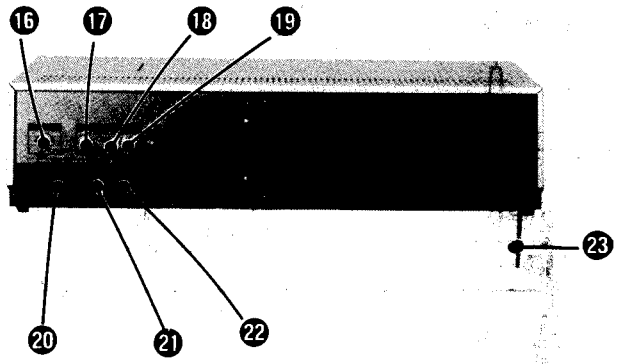

⑯ RF CHANNEL screw
If there is interference on the factory preset channel for RF output and the signal of this recorder be displayed clealy on the TV screen, adjust this screw with the screwdriver attached on the back of the turning compartment cover.

⑰ AERIAL OUT socket
Connect the aerial input of the TV receiver using the supplied cable.

⑱ DX/LOCAL switch
Normally set this switch to DX. If the TV signal is very strong, set the switch to LOCAL.

⑲ AERIAL IN socket
Connect the aerial cable.

⑳ MULTI OUT connector (8-pin)
Connect to the multi input of a colour monitor or a TV receiver equipped with an 8-pin connector.

㉑ VIDEO OUT jack (BNC type)
Connect to the video input of another video cassette recorder or a video monitor.

㉒ AUDIO OUT jack (phono type)
Connect to the audio input of a video monitor or a video cassette recorder.

㉓ Mains lead

1-3. CONNECTIONS

Notes

- Unplug each unit from the mains outlet before making the following connections.
- Make sure the connections are secure. A loose connection may cause a noisy picture.

CONNECTING A TV

1 Remove the aerial cable from its socket in the back of the TV. Then connect the aerial cable to the AERIAL IN socket at the rear of the recorder.
2 Connect the aerial input of the TV to the AERIAL OUT socket of the recorder, using the supplied cable.
3 Connect the recorder and the TV to the mains supply with their own mains leads.
4 Turn on the power of each unit.

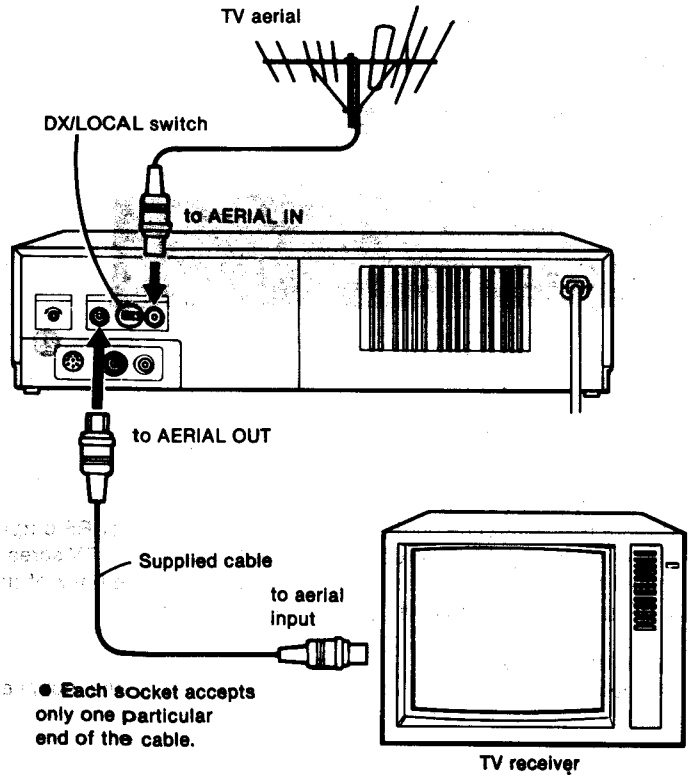

- Each socket accepts only one particular end of the cable.

Now the recorder is set up to intercept all signals from the aerial on their way to the TV. The recorder then passes on the signals to the TV. This is why you can record a programme while it is being shown on the TV, or while the TV is showing another programme, or even when the TV is turned off.

Notice for customers in a strong signal area

The recorder has a booster to assure stable TV reception. However, in areas near TV stations, where the TV signal is very strong, the picture may be affected by the booster. If this happens, set the DX/LOCAL switch on the rear panel to LOCAL.

CONNECTING A COLOUR MONITOR

To obtain a higher-quality picture, connect the unit to a colour monitor, such as the Sony Profeel colour monitor, instead of a conventional TV. The aerial should be connected to the recorder in the same way as a conventional TV.
When using a colour monitor, the following "Adjusting the TV" is not necessary.

Using the audio and video cables

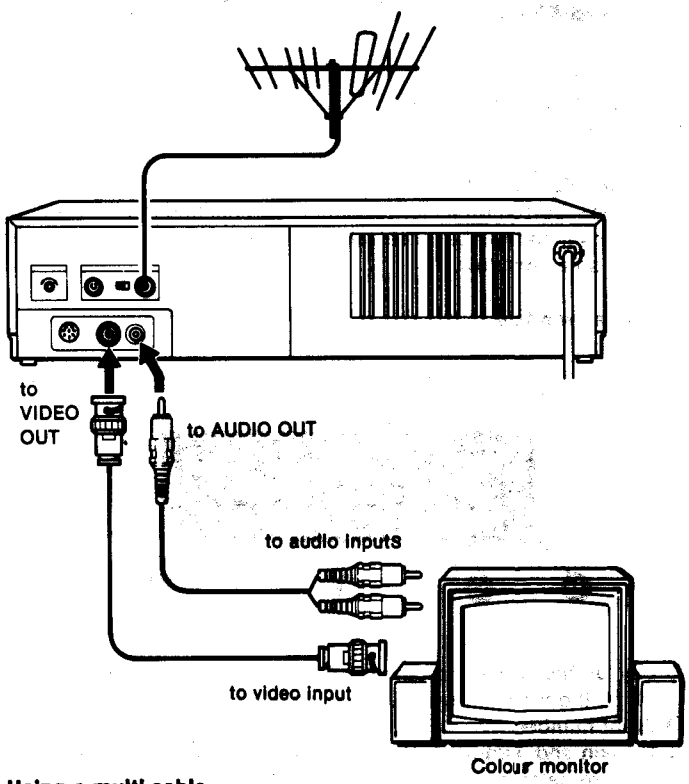

Using a multi-cable

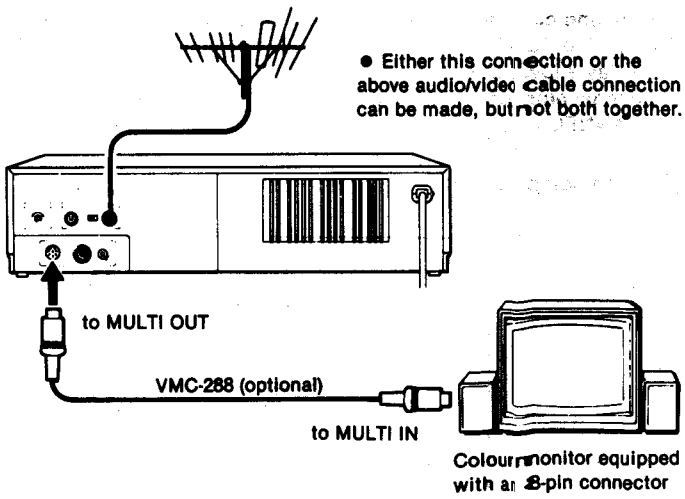

- Either this connection or the above audio/video cable connection can be made, but not both together.

1-4. ADJUSTING THE TV

One of the television channels must be adjusted to receive the signal from the recorder.

1 After making the connections, press the ON/STANDBY button.
2 Insert the supplied cassette with the round window to the left.
3 Press the ▶ PLAY button.
4 Turn on the TV and select a channel which is not being used to receive a TV station. Tune the channel until you see a clear playback picture.
● Note that the playback signal is transmitted on a channel between UHF channels 30 and 39.

If the test picture is free of disturbance, the TV adjustment is complete.
If the test picture is not free of disturbance, proceed with the next adjustment.

> Whenever you use the video recorder, you should set the TV to the channel selected in this adjustment.

—If you are not sure how to adjust your TV, please refer to the TV's instruction manual or consult your dealer.

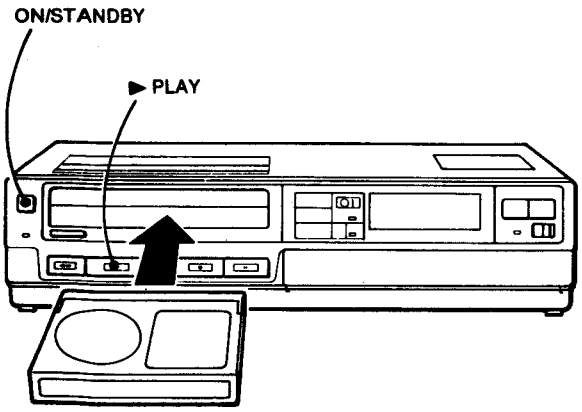

If the test picture is not free of disturbance
1 Adjust the channel of the TV to a channel between UHF channels 30 and 39 with the tuning control or the fine tuning control on the TV, so that the TV screen shows no picture and so that a steady rustling sound or no sound is heard.
2 Play back the cassette again.
3 Using the screwdriver attached on the back of the tuning compartment cover, slowly turn the RF CHANNEL screw on the back of the recorder until you see an undistorted picture on the TV screen.
4 Now the TV adjustment is complete.

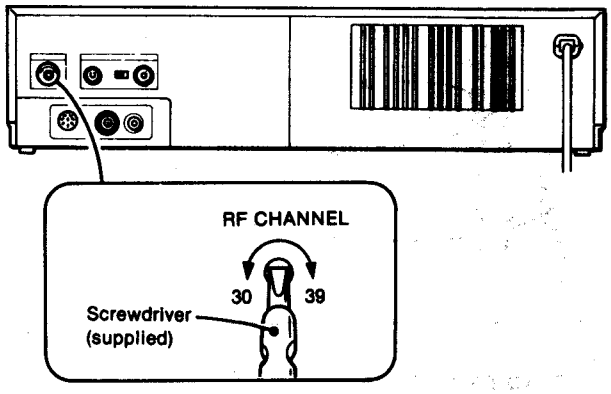

1-5. TV STATION PRESETTING

Once you have tuned your TV to the recorder, the next step is to tune the recorder to all the TV stations that you can receive in your area. Up to 8 TV stations can be preset in any order.

- Make sure that nothing is connected to the input jacks in the front panel compartment.

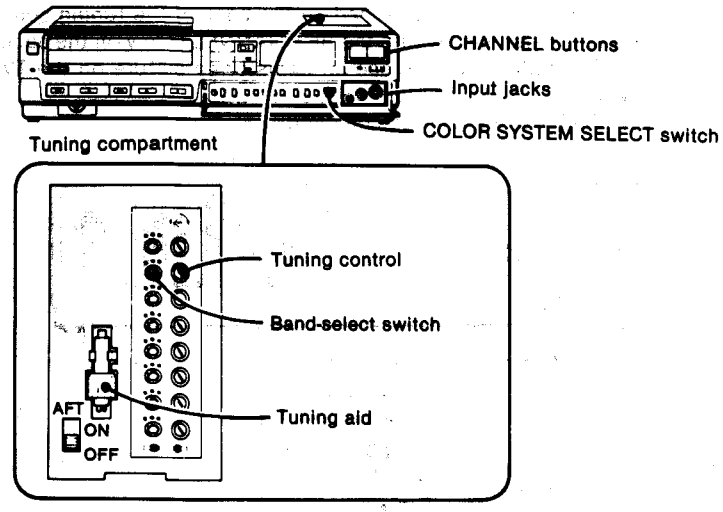

PRESETTING PROCEDURE

1 Set the COLOR SYSTEM SELECT switch to AUTO. If the signal is too weak, set the switch to the position according to the colour system of your area.
2 Press the CHANNEL + or − button to select the channel to be preset.
3 Open the tuning compartment and set the AFT switch to OFF.
4 Using the supplied tuning aid, set the band-select switch corresponding to the selected channel number to one of the three positions:

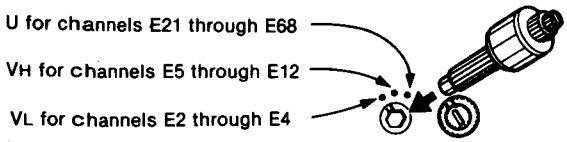

5 Using the other side of the tuning aid, turn the tuning control until the desired station is properly tuned in.
The indicator on the top of the tuning aid shows the approximate position in the selected band.

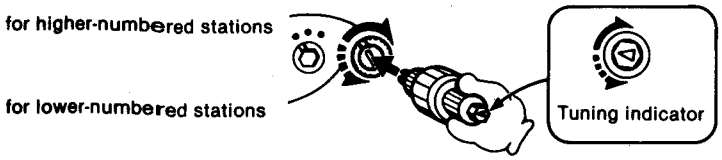

If you keep turning the tuning control clockwise, you will again get to the lowest-numbered station within that band.

When the picture appears, slowly turn the tuning control to the right until a herringbone pattern appears in the coloured part of the picture, then turn the control back until the picture is perfectly clear.

To identify the stations, consult a newspaper or TV programme guide.

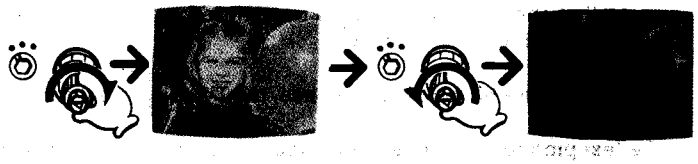

6 Repeat the same operation for all the other stations.
7 Set the AFT switch to ON and close the tuning compartment.
AFT (automatic fine tuning) circuit locks in the signal and maintains a sharp picture.

After presetting the TV stations, you can use the CHANNEL buttons of the recorder to tune in a station for viewing as well as recording.

1-6. CLOCK SETTING

When you connect the mains lead to a wall outlet, the clock indicates "0 : 00" with the two dots blinking.

Example : To set the clock to 7 : 35 p.m. (19 : 35) on Tuesday *

*** Time indication**

AM				PM					
12:00 (midnight)	1:00		11:00	12:00 (noon)	1:00	2:00		10:00	11:00
↓	↓		↓	↓	↓	↓		↓	↓
0:00	1:00	.....	11:00	12:00	13:00	14:00	.....	22:00	23:00

Day indication

Monday	Tuesday	Wednesday	Thursday	Friday	Saturday	Sunday
↓	↓	↓	↓	↓	↓	↓
1	2	3	4	5	6	7

1 CLOCK SET SET/START	[redacted]
2 DAY	[redacted]
3 HOUR	[redacted]
4 10 MIN	[redacted]
5 MIN	[redacted]
6 CLOCK SET SET/START **With the time signal, press and immediately release, otherwise the clock will not start operating.** If you press the CLOCK SET button for more than a second, clock adjustment will be required again.	[redacted] The upper dot blinks for the first half of each minute, and the lower dot for the second half.

Zero second adjustment
Press the CLOCK SET button quickly (less than a second).
While the upper dot is blinking, the clock is set to the time displayed 00 second. For example, if the clock time is 7 : 30, 20 seconds, it is set to 7 : 30, 00 second.
While the lower dot is blinking, the clock advances one minute and is set to the time displayed 00 second. For example, if the clock time is 7 : 30, 40 seconds, it is set to 7 : 31, 00 second.

> If you press the CLOCK SET button for more than a second, "0 : 00" blinks to show that the clock adjustment is required again.

When power has been interrupted for more than 5 minutes, the time indication "0 : 00" blinks, showing that the clock must be reset.
If power has been interrupted for less than 5 minutes, the displayed time remains correct.

The DAY, HOUR, 10 MIN and MIN buttons can be pressed in two ways :

When you hold a button down, the digits will advance continuously until the button is released.

When you press and immediately release a button, the digits will advance by one.

1-7. TV PROGRAMME RECORDING

1

ON/STANDBY

2

Insert the cassette with the round window to the left.

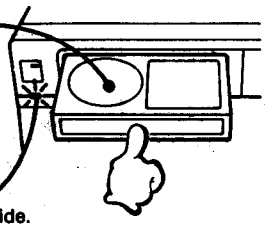

Lights when a cassette is inside.

3 Turn on the TV and select the channel for the video recorder.

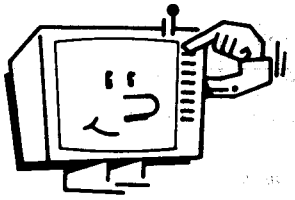

4 Select the channel to be recorded.

CHANNEL

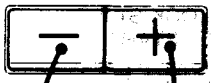

For a higher-numbered channel

For a lower-numbered channel

To eject the cassette
Press after stopping the recording.

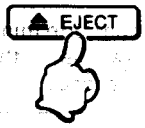

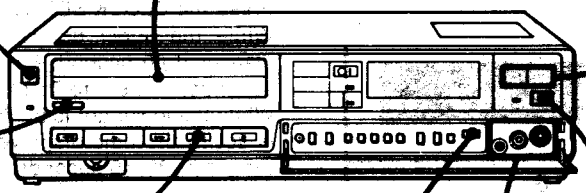

Nothing should be connected to these input jacks.

To stop recording

STOP

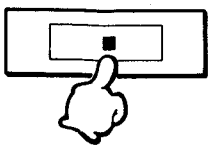

When the tape reaches the end during any tape mode, it will be automatically rewound to the beginning.

Normally set to AUTO.
The associated indicator will illuminate.
If the signal is too weak so that the indicator does not function correctly and picture on TV is distorted, select the position manually.

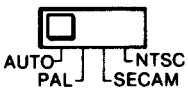

COLOR SYSTEM SELECT

5

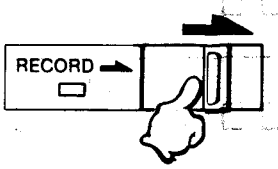

If the inserted cassette does not have the safety tab, or if the tape is at its end, the cassette will be automatically ejected.

RECORDING ONE TV PROGRAMME WHILE VIEWING ANOTHER

You can enjoy one TV programme while recording another TV programme as follows:

1. Start recording the desired TV programme in the usual way.
2. Select the programme you want to view on the TV.

TO STOP RECORDING MOMENTARILY

Press the ❚❚ PAUSE button. The TV programme can be seen on the TV, but the picture will not be recorded.
To resume recording, press the ❚❚ PAUSE button again or the RECORD button.
To protect the video heads and the tape, the pause mode will be automatically released after about 8 minutes and recording will stop.

CAUTION

Television programmes, films, video tapes and other materials may be copyrighted. Unauthorized recording of such material may be contrary to the provision of the copyright laws.

TO KEEP A RECORDED PROGRAMME FROM BEING ACCIDENTALLY ERASED.

When a new recording is made on a previously recorded cassette, the previous recording will be automatically erased.

To avoid erasing a recording
Break off the safety tab using a screwdriver or similar object.

To re-record on a cassette which has had the safety tab removed
Cover the slot with a piece of plastic tape.

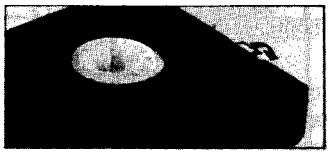

1-8. PLAY BACK

1

ON/STANDBY

2 Insert the cassette with the round window to the left.

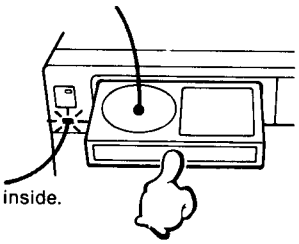

Lights when a cassette is inside.

3

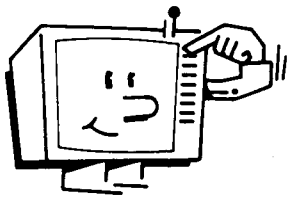

Turn on the TV and select the channel for the video recorder.

4

PLAY

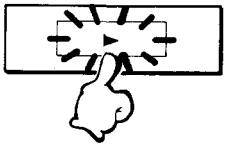

To eject the cassette

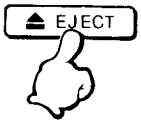

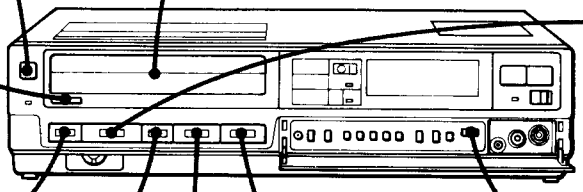

To rewind the tape

REW

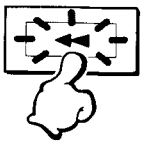

To advance the tape rapidly

FF

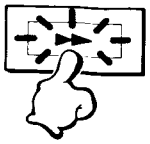

When the tape reaches the end, it will be automatically rewound to the beginning.

To stop playback

STOP

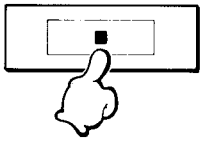

To stop the playback momentarily

PAUSE

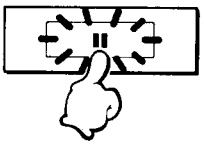

A still picture will be seen on the TV screen.
To resume playback, press the ❚❚ PAUSE button again or ▶ PLAY button.
The pause mode will be automatically released after about 8 minutes and the playback will resume.

Normally set to AUTO. The associated indicator will illuminate.
If the tape has been improperly recorded so that the indicator does not function correctly and the picture on TV is distorted, select the position manually.

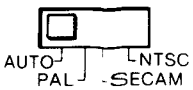

COLOR SYSTEM SELECT

AUTO PLAY To playback from the beginning of the tape after rewinding

Press the ▶ PLAY button and ◀◀ REW button simultaneously in the stop mode. The ▶ PLAY button blinks during rewinding.
After the tape is completely rewound, it will be automatically played back.

PICTURE SEARCH Viewing the picture at a fast speed to find a particular scene.

During playback mode, keep ▶▶ FF button pressed for a fast-speed forward picture and the ◀◀ REW button for a fast-speed reverse picture. To resume normal playback, release the button.

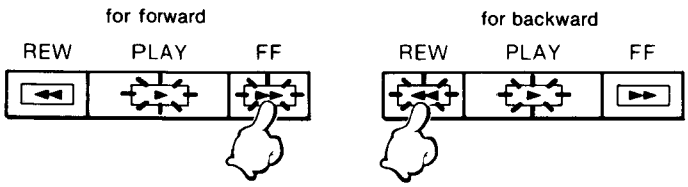

SKIP SCAN Viewing the picture momentarily during fast-forward or rewind.

During the fast-forward or rewind mode, keep the same mode button pressed. To resume the normal rewind or fast forward mode, release the button.

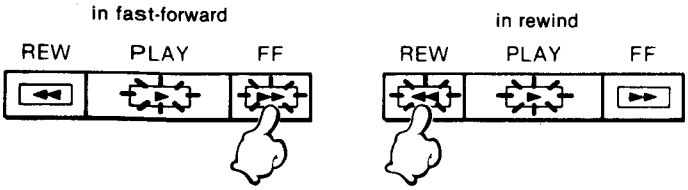

- Streaks will appear in the picture search and skip scan modes.

When playing back a tape recorded on another machine

If streaks or snow appears, adjust the TRACKING control for the best possible picture.
Return the control to the centre position after playing back the tape.

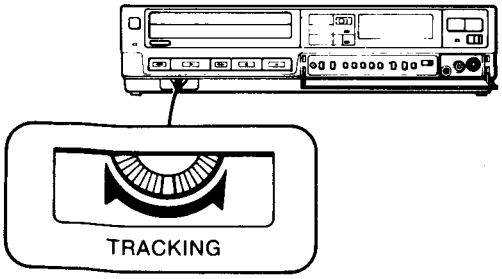

USE OF THE TAPE COUNTER

Turn on the power and press the CLOCK/COUNTER button to display the counter reading in the display window.
To return the display to the present time, press the CLOCK/COUNTER button again.

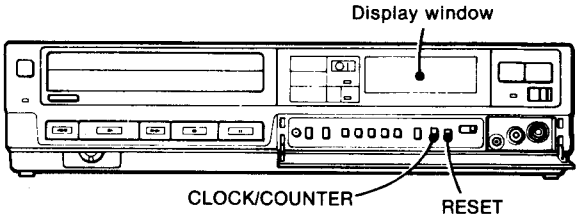

Before starting recording or playback, press the RESET button to set the counter to "0000".
By noting the counter reading at the desired point, you can easily find that point later by referring to the counter.

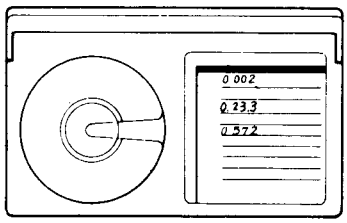

Write the counter readings you want to remember on the label of the cassette.

Normal rewinding will stop at the tape counter's "0000" position.
To rewind the tape further, press the ◀◀ button again.
With automatic rewinding from the tape end or for "auto play", the tape will not stop at the counter's "0000" position.

Notes

- The counter reading is automatically reset to zero when a cassette is newly inserted.
- While the power is off, the display shows the present time, regardless of the CLOCK/COUNTER setting.
- The counter reading will be retained in the memory even after the power is turned off, as long as the cassette is in the cassette compartment.
- The tape counter does not operate when a blank, unrecorded tape is played.

1-9. TIMER-ACTIVATED RECORDING

You can make one or two recordings within 7 days even when you are not at home. These recordings are identified as event 1 or event 2.

Check before setting the timer
- Is the clock set to the correct day and correct time?
Timer setting can only be made after the clock has been set.
- Is a cassette inserted in the recorder?
- Is the cassette long enough to record the programmes?
- Does the cassette have a safety tab on the bottom?
- Make sure that nothing is connected to the input jacks in the front panel compartment.
- Is COLOR SYSTEM SELECT switch set correctly?

Example: To record a channel 2 broadcast from 9:00 AM to 11:25 AM on Friday for event 1.

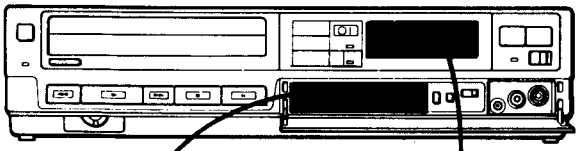

1 **Button to be pressed.**
TIMER SET/
EVENT (CHECK)

If the recorder is off, it will be turned on automatically.

Time display
The segment to be set will blink.

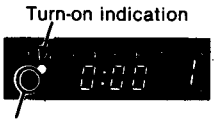

Shows the event number.
Event 1 always appears first.

2 **Select the turn-on day.**
DAY

Indication changes as follows:

1234567 (everyday) → 1 (Monday) → 2 (Tuesday)... → 7 (Sunday)

3 **Set the turn-on time.**
H 10M M

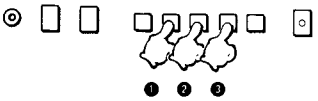

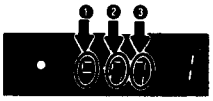

4 **Select the channel to be recorded.**
CHANNEL

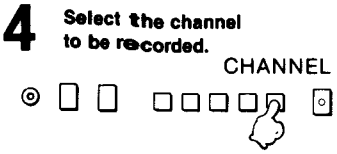

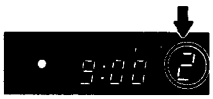

5 TIMER SET/
EVENT (CHECK)

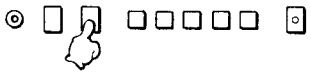

6 **Set the turn-off time.**
H 10M M

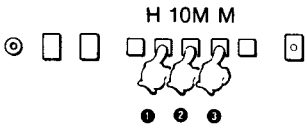

7
TIMER
REC

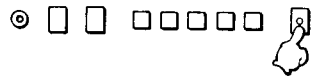

TIMER REC lamp lights up and the power is turned off.
At the preset turn-on time, recording will start automatically and will stop at the preset turn-off time.

If the inserted cassette is at its end or does not have the safety tab, the cassette will be automatically ejected.

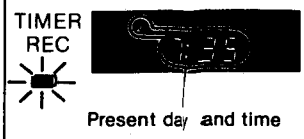

ONCE THE TIMER REC LAMP HAS LIT UP, NO FUNCTION OF THE RECORDER CAN BE ACTIVATED, except for checking the timer setting.
To operate the recorder after setting the timer for recording, press the TIMER REC button so that the TIMER REC lamp goes off. To reactivate the timer recording standby mode, be sure to press the TIMER REC button again.

To record to the end of the tape

Set the turn-off time to a time after the tape will reach its end.

If the tape reaches the end during the timer recording

The recording will stop and the tape will be rewound to the beginning. Then after about a second, the recorder will be turned off.

To stop the on-going timer recording

Press the TIMER REC button so that the TIMER REC lamp goes off. The unit will be turned off automatically after about a second.

To erase the setting of an event

1. Press the TIMER SET button to display the event to be erased.
2. Press the CLEAR button. This event will be erased from the memory.

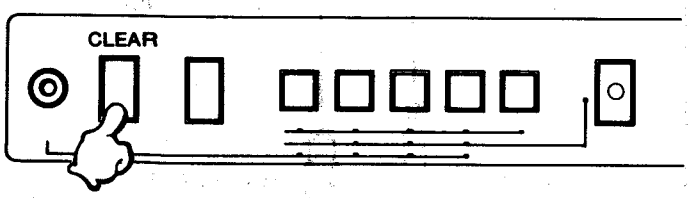

When a power interruption occurs before and during timer recording

If the clock shows "0 : 00" and the dots blink
All the timer settings have been erased. Reset the clock time and the timer settings.

If the clock still shows the correct time but the dots blink
The power has been interrupted for less than 5 minutes.
The timer programmes are retained in the memory and the on-going timer recording will resume when the power is resupplied.
To stop the blinking, press any button in the timer-setting compartment.

ERROR INDICATIONS

If the ● and ○ indications as well as the event numbers blink when the TIMER REC button is pressed...
It means that the setting of these events overlap. Check the settings and eliminate the overlap.

Example :

Timer setting

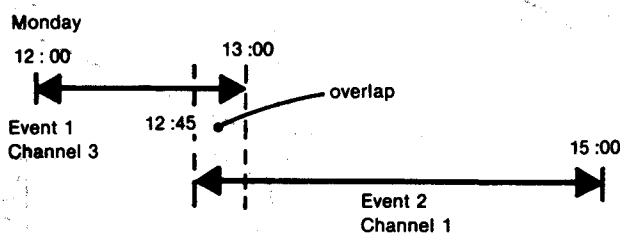

Even with this error indication, recording can be made.
In this case, the first preset recording continues to its turn-off point and then the next recording begins.

Realized recording

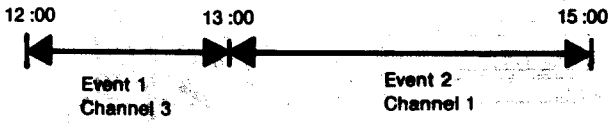

If the turn-on time of the 2 events is the same, recording of event 1 will be made.

TO CHECK THE TIMER SETTING

Press the TIMER SET button. Each time you press the button, the indication will change as follows :

Example : Both event 1 and 2 have been programmed.
Turn-on day and time of event 1 → Turn-off day and time →
Turn-on day and time of event 2 → Turn-off day and time →
Present time

During actual timer recording, only the turn-off time of the event being recorded can be checked.

1-10. CAMERA RECORDING

To produce your own programmes

CONNECTIONS

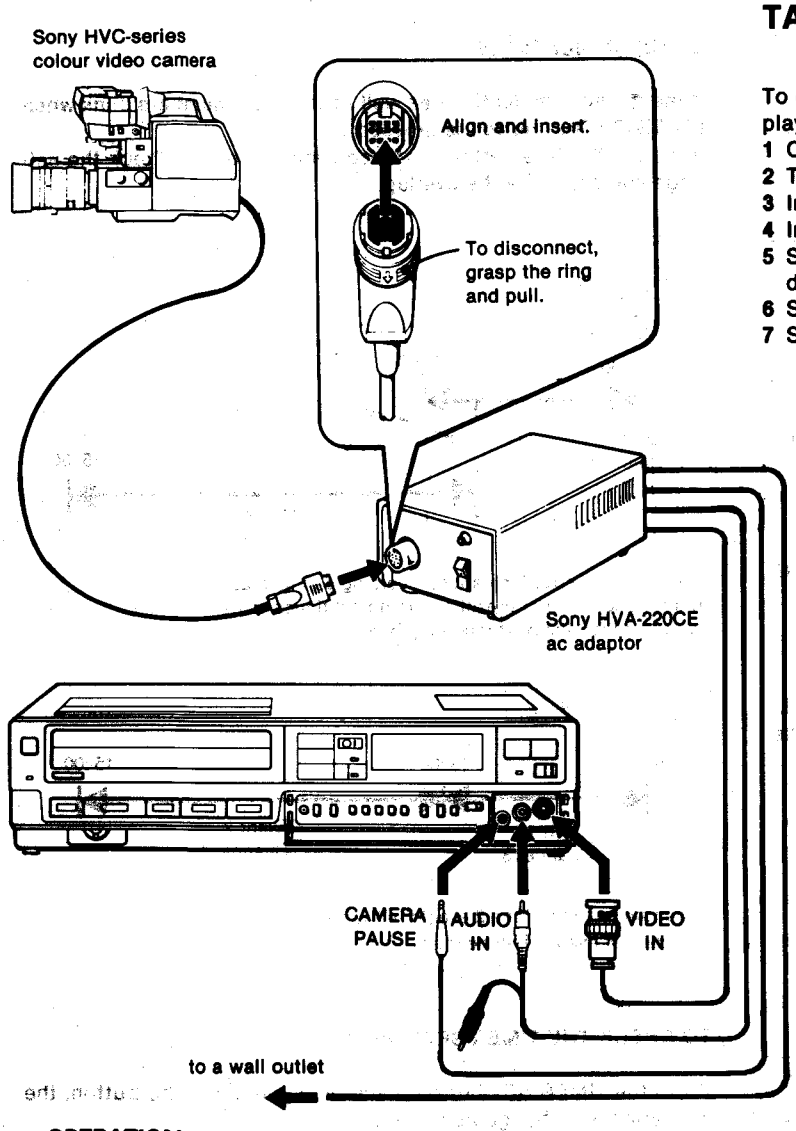

OPERATION

- Press the ON/STANDBY button to turn on the recorder and insert a cassette.
- Turn on the power switch on the ac adaptor.
- Make the necessary adjustments on the camera. See the instruction manual furnished with the camera.
- Press the RECORD button. Recording will begin.
- If a camera with a tape run/stop button is used, you can momentarily stop recording and restart it using that button.
- If any other camera is used, use the ❚❚ button on the recorder or on the Remote Commander to stop the recording momentarily and restart it.
- When the recording is finished, press the ■ button.

To view the picture being recorded on the TV screen

- Turn the connected TV on.
- Select the channel for the video recorder on the TV.

The picture being recorded will appear on the TV screen.

- If acoustic feedback (a whistle-like sound) is heard when the microphone sound is recorded, turn the microphone (or the camera, if the microphone is built into the camera) away from the TV or turn down the TV volume.

To record the sound from other audio sources

Connect an audio source, such as a tape recorder, into the AUDIO IN jack.

TAPE COPY

To duplicate a tape, you will need two video recorders; one is to play back the original tape and the other is to record.

1 Connect the recorders as illustrated.
2 Turn on both recorders.
3 Insert the original cassette into the recorder for playback.
4 Insert a blank cassette into the recorder for duplicating.
5 Set the INPUT SELECT switch to LINE if the recorder for duplicating is provided with such switch.
6 Set the recorder for playback into the playback mode.
7 Set the recorder for duplicating into the record mode.

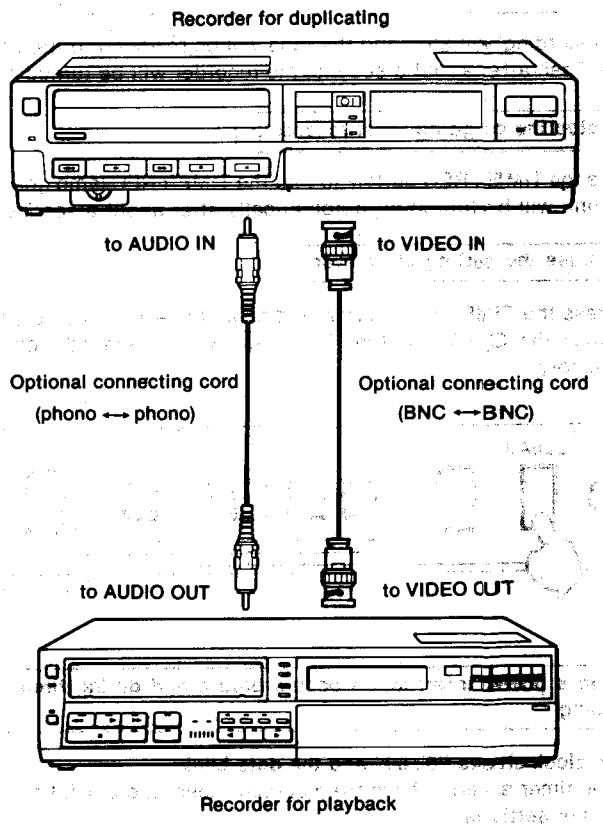

CAUTION

Television programmes, films, video tapes and other materials may be copyrighted. Unauthorized duplication of such material may be contrary to the provision of the copyright laws.

SECTION 2
DISASSEMBLY

2-1. REMOVAL OF THE CASE AND FRONT PANEL

1) Remove the four screws ①.
2) Remove the upper case ② in the direction shown by the arrow Ⓐ.
3) Remove the eight screws ③ and the lower case ④ in the direction shown by the arrow Ⓑ.
4) Remove the two screws ⑤ and the front panel ⑥ in the direction shown by the arrow Ⓒ.

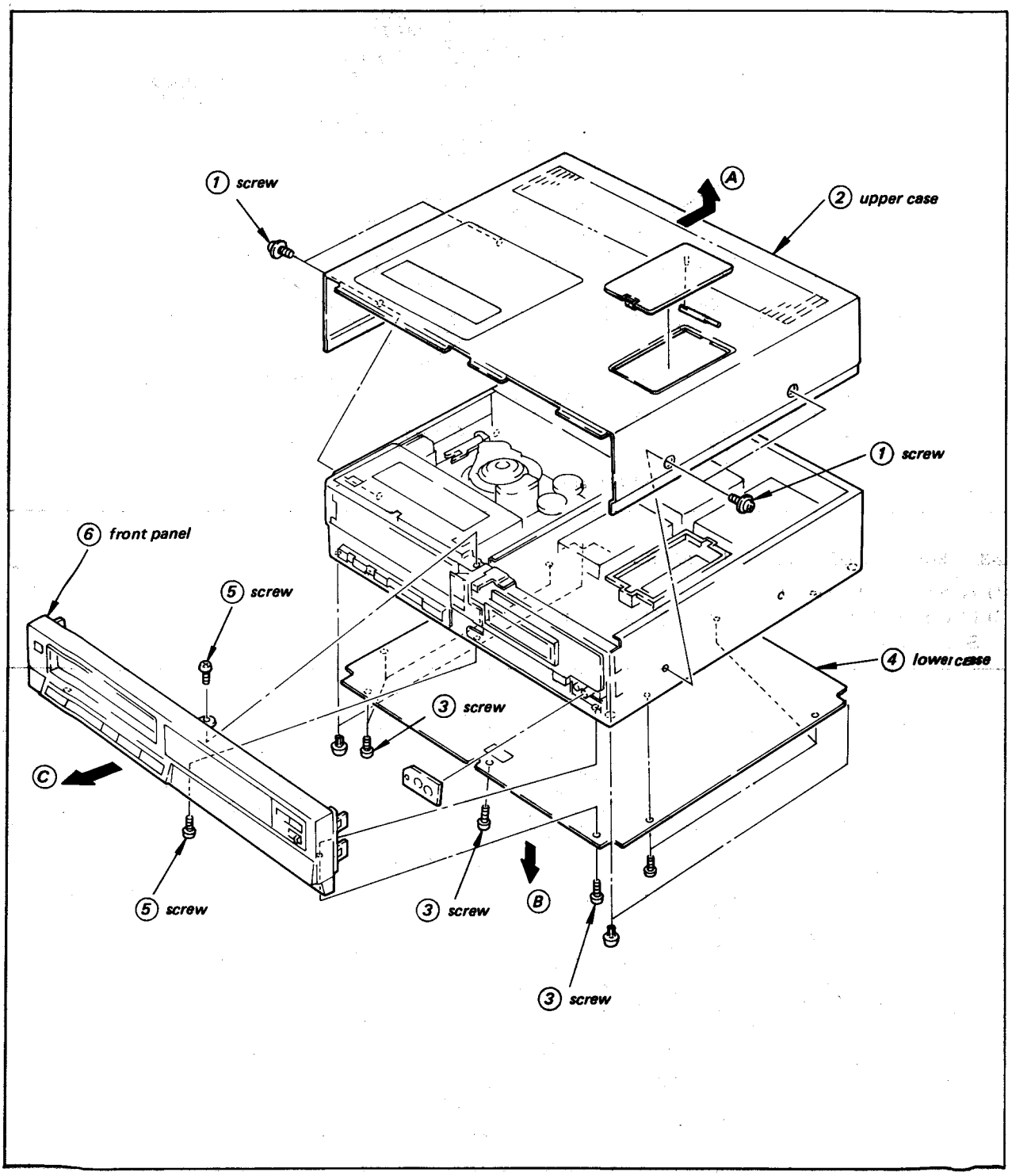

2-2. REMOVAL OF THE TM-48, TM-49 BOARDS

1) Pull out the five connectors ①.
2) Pull out connector. ② .
3) Remove the two screws ③ and the TM-49 board.
4) Remove the two screws ④ and the TM-48 board.

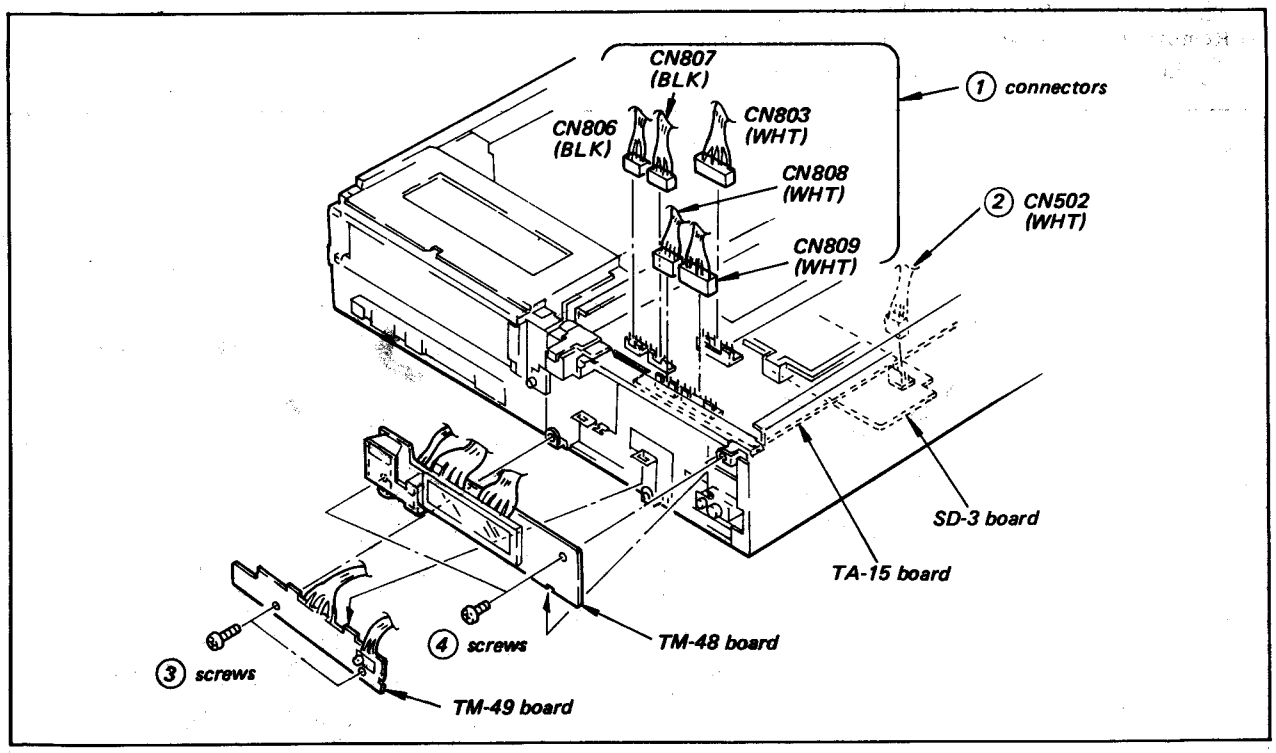

2-3. REMOVAL OF THE FU-19 BOARD

1) Remove the three screws ①.
2) Disconnect the two connectors ② from the SS-20 board.

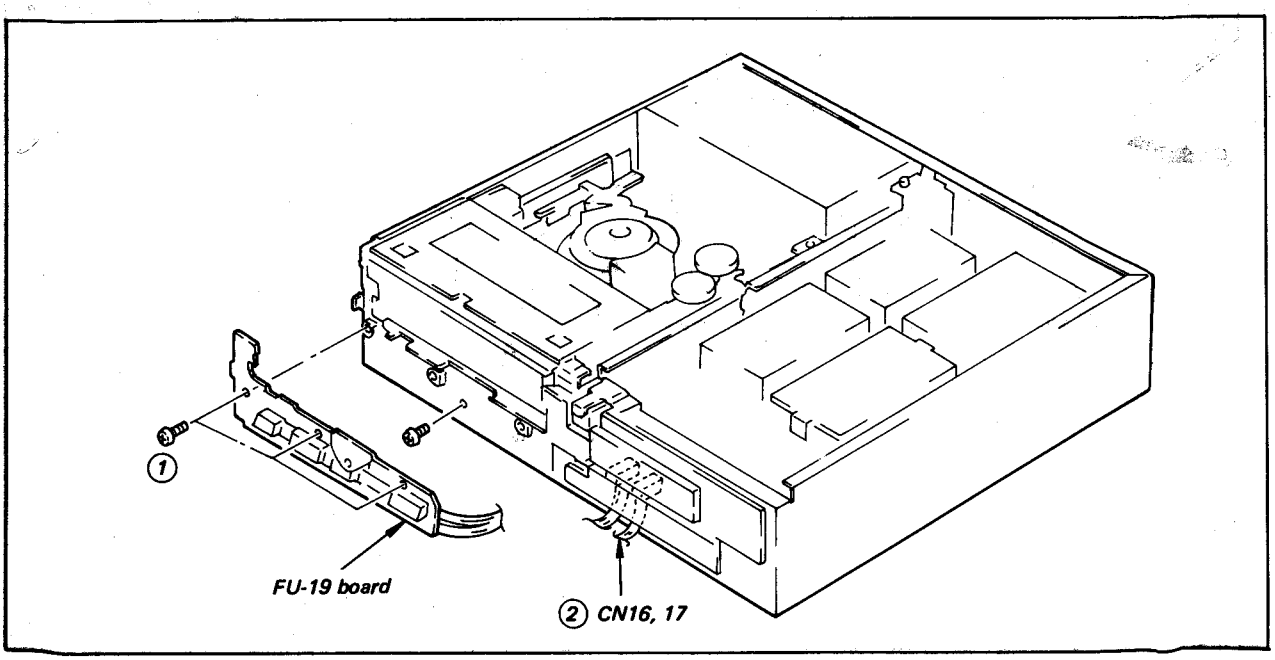

2-4. REMOVAL OF POWER BLOCK

1) Remove the four screws ①.
2) Remove the screw ②.
3) Remove the seven connectors ③ (CN1–7).
4) Remove the power block in the direction shown by the arrow Ⓐ.

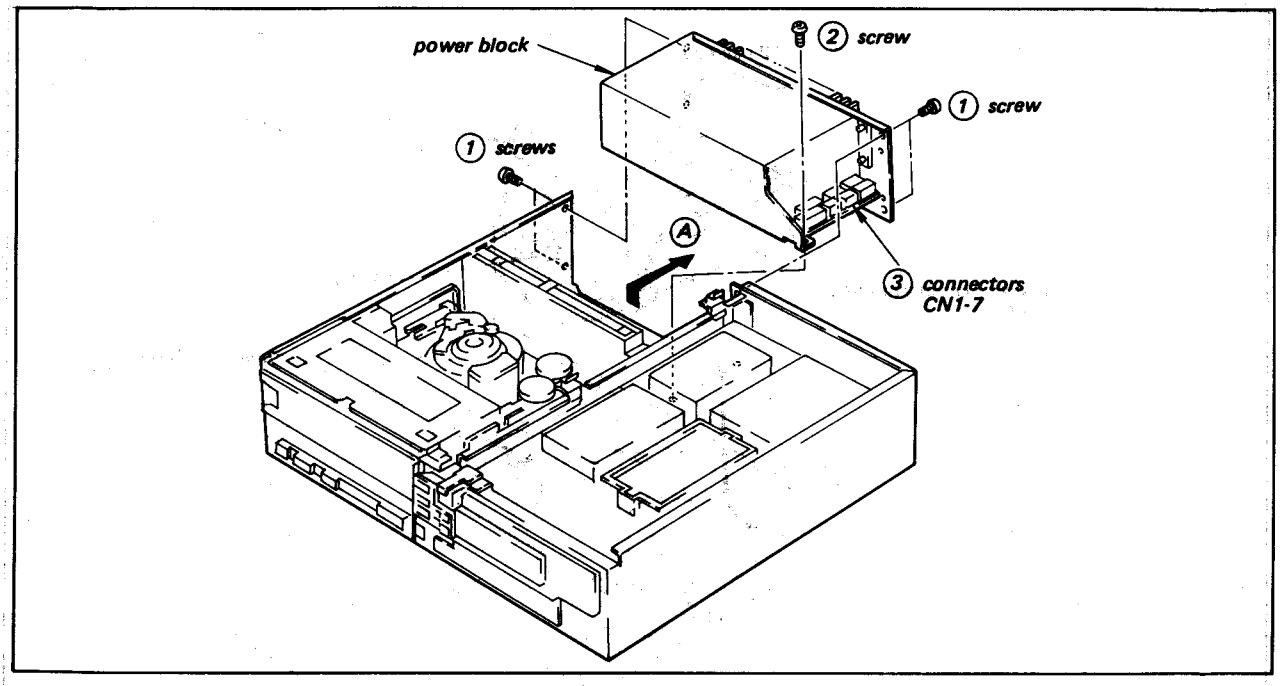

2-5. REMOVAL OF THE RF-14 BOARD

1) Remove the screw ①.
2) Pull out the three connectors ②.

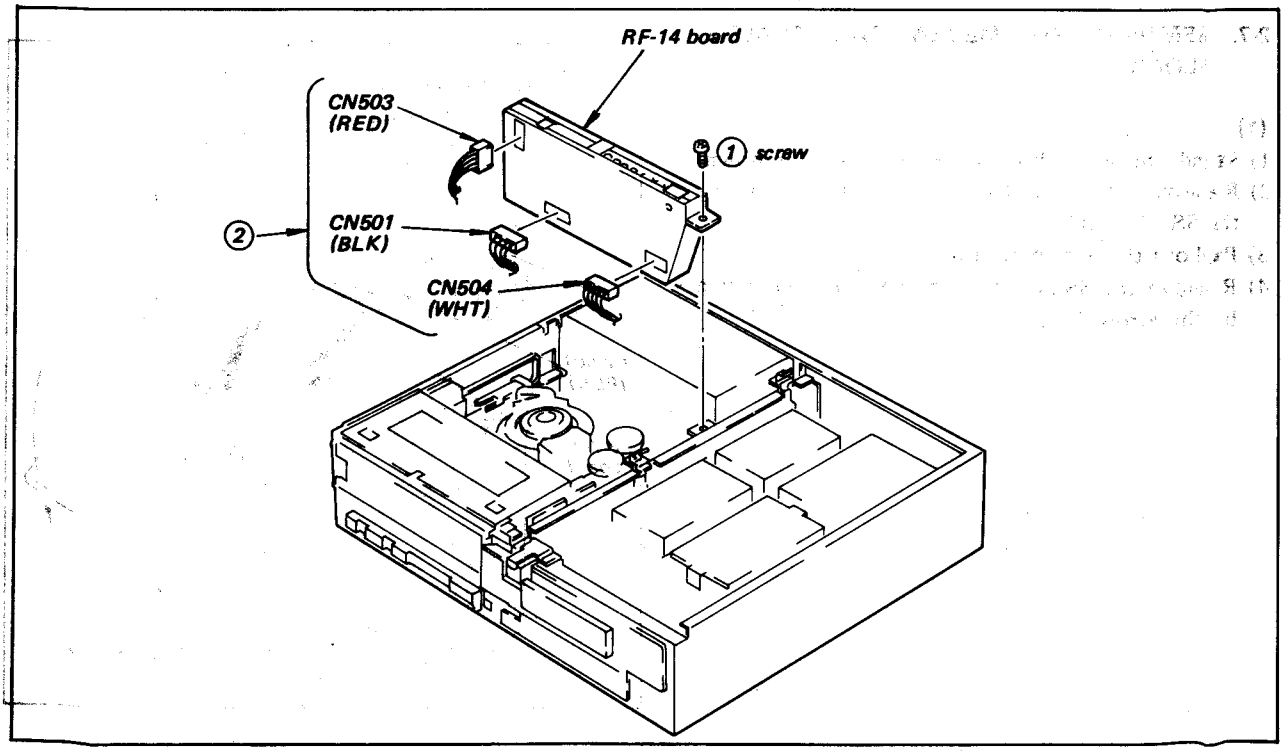

2-6. REMOVAL OF FL CASSETTE COMPARTMENT ASSEMBLY

1) Loosen the loading belt ① exerting a force on the threading motor.
2) Remove the five mounting screws ② of the FL cassette compartment.
3) Disconnect the exposed connector from the CS-3 board (CN-7) on the FL cassette compartment.
4) Lift the FL cassette compartment assembly in the direction shown by the arrow to remove.

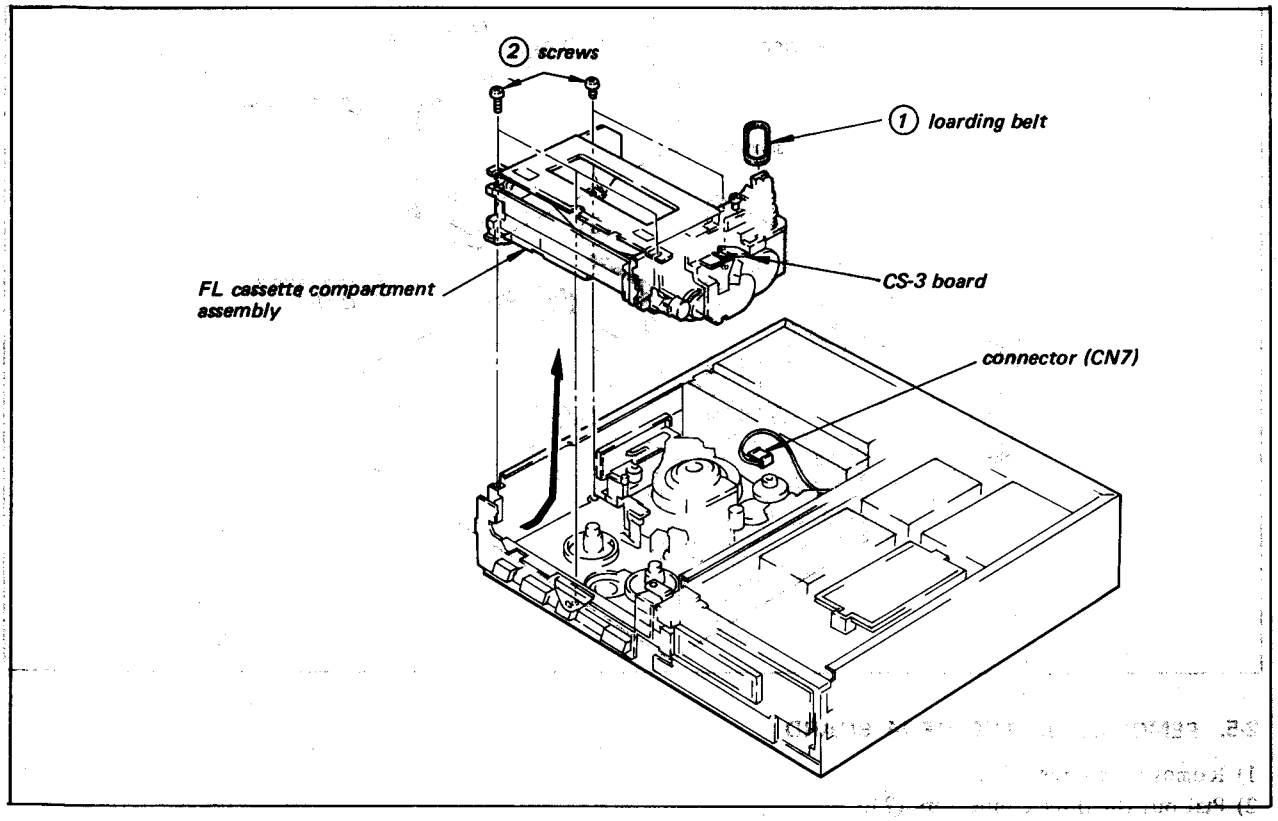

2-7. REMOVAL OF MECHANICAL CHASSIS BLOCK

(1)

1) Stand the set with its power block section down.
2) Remove the two P. C board holders ①, holding the SS-20 board.
3) Pull out the two connectors ②.
4) Remove the SS-20 board in the direction shown by the arrow Ⓐ.

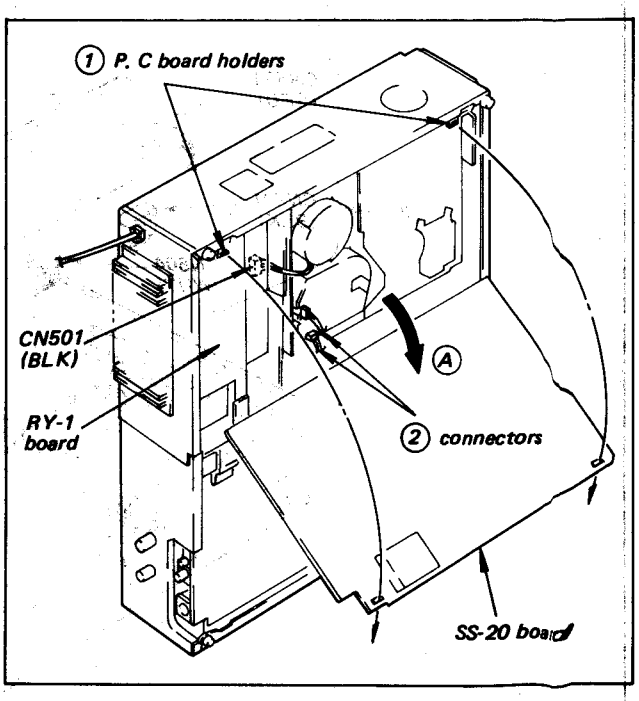

(2)

1) Pull out the connector ① (CN-7)
2) Pull out the seventeen connectors from the SS-20 board and pull out the rest one from TA-15 board.
3) Remove the seven screws ② and the mechanical chassis block.

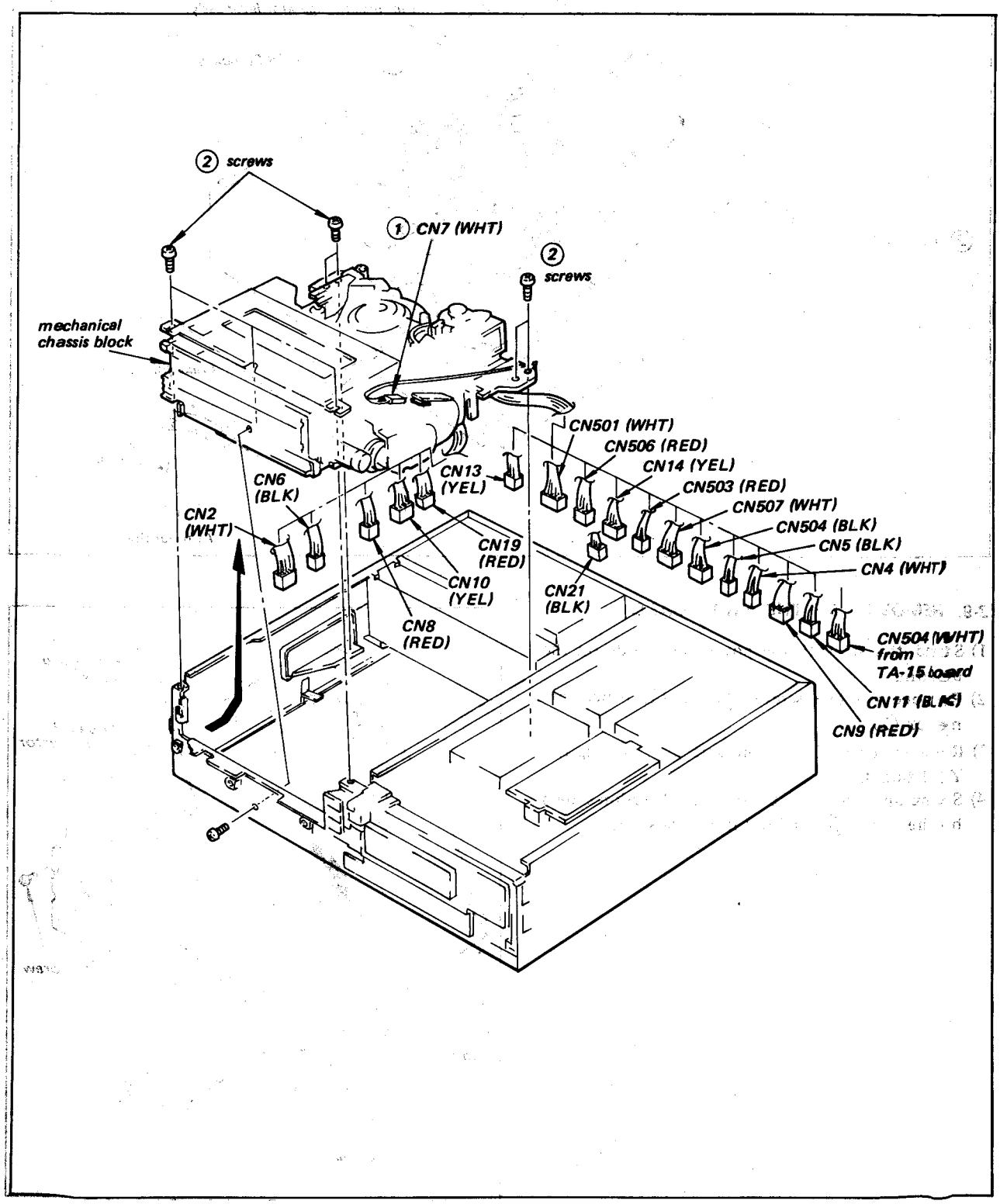

2-8. REMOVAL OF REEL ASS'Y

1) Remove four screws ①.
2) Remove the reel block ②.

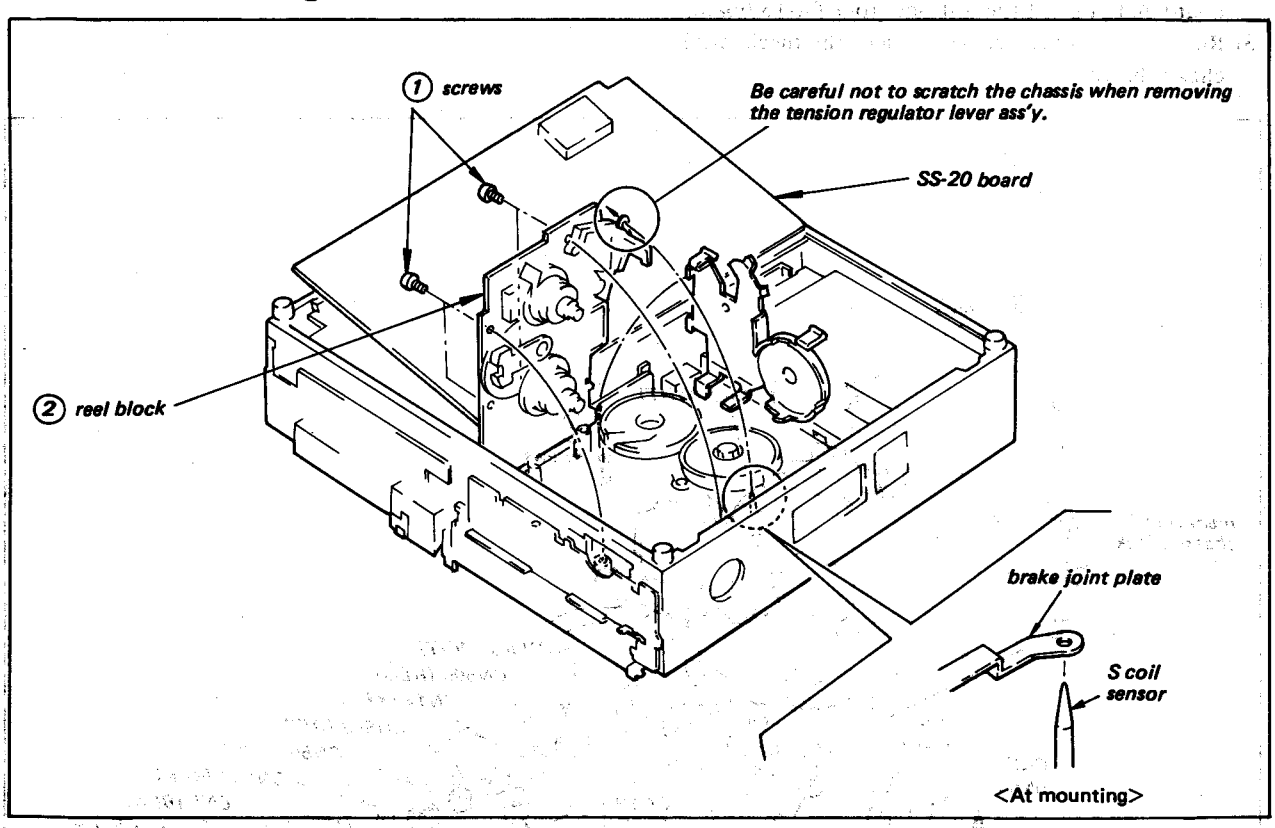

2-9. REMOVAL OF THE YR-1 BOARD

1) Stand the set with the power block side on the bottom.
2) Remove the two screws ① and the panel connector ②.
3) Remove the P. C board holders ③, holding the YR-1 board.
4) Swing open the YR-1 board in the direction shown by the arrow Ⓐ and rest it on a cassette.

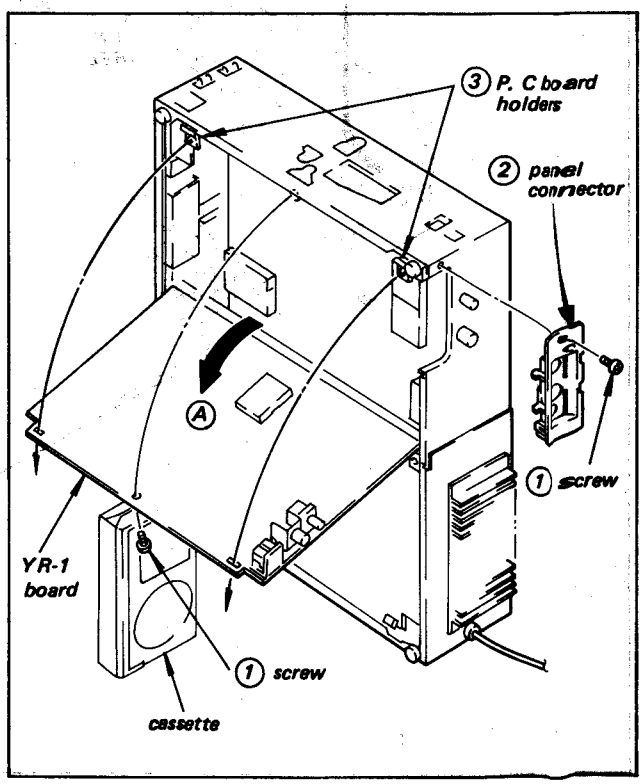

2-10. REMOVAL OF THE SS-20 BOARD

1) Stand the set with the right side panel on the bottom.
2) Remove the screw ①.
3) Remove the two P. C Board Holders ②, holding the SS-20 board.
4) Swing open the SS-20 board in the direction shown by the arrow Ⓐ and rest it on a cassette.

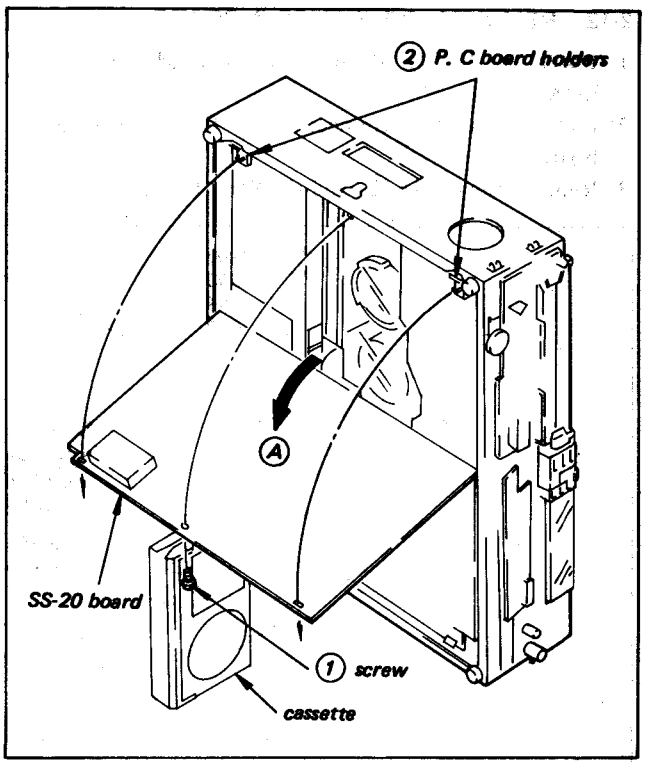

2-11. REMOVAL OF THE TA-15 BOARD

1) Remove the screw ①.
2) Remove the two P.C Board Holders ② holding the TA-15 board.
3) Remove the TA-15 board in the direction shown by the arrow Ⓐ.

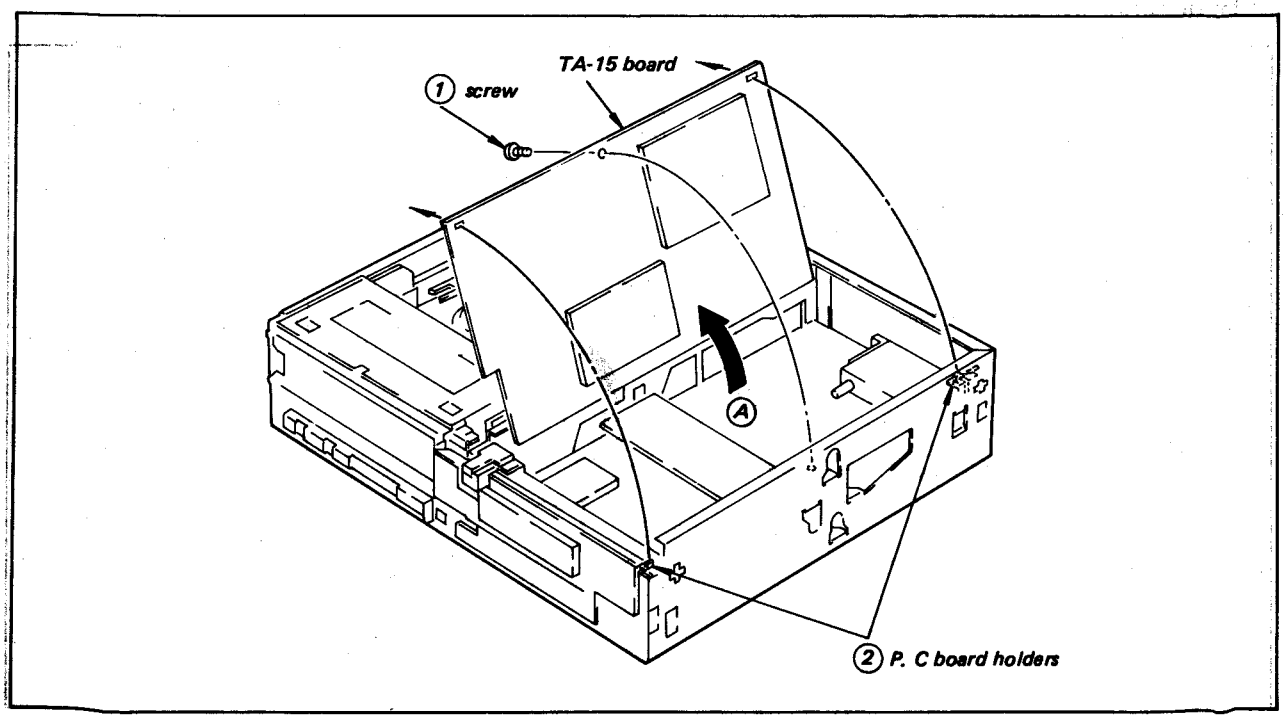

2-12. REMOVAL OF THE SD-3 BOARD

1) Refer to (2-11) REMOVAL OF THE TA-15 BOAD.
2) Pull out the five connectors ① from the SD-3 board.
3) Remove the screw ② and the SD-3 board.

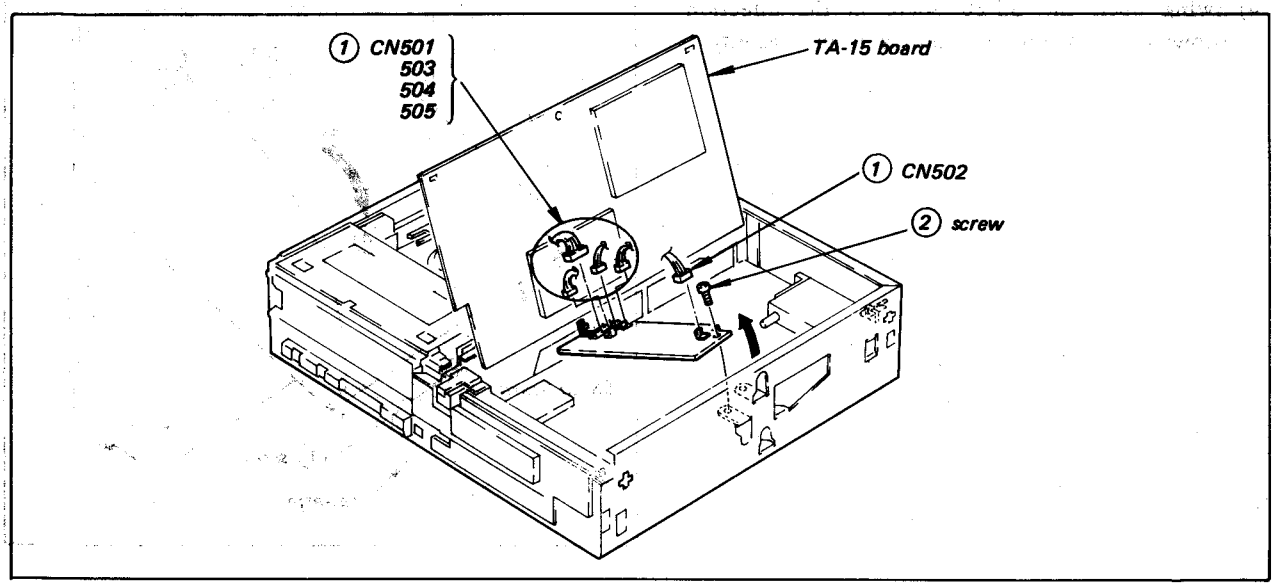

2-13. REMOVAL OF THE CL-7 BOARD

1) Refer to (2-9) REMOVAL OF THE YR-1 BOARD.
2) Remove the screw ①.
3) Remove the two P.C. Board Holders ②, holding the CL-7 board.
4) Swing open the CL-7 board in the direction shown by the arrow Ⓐ and rest on a cassette.

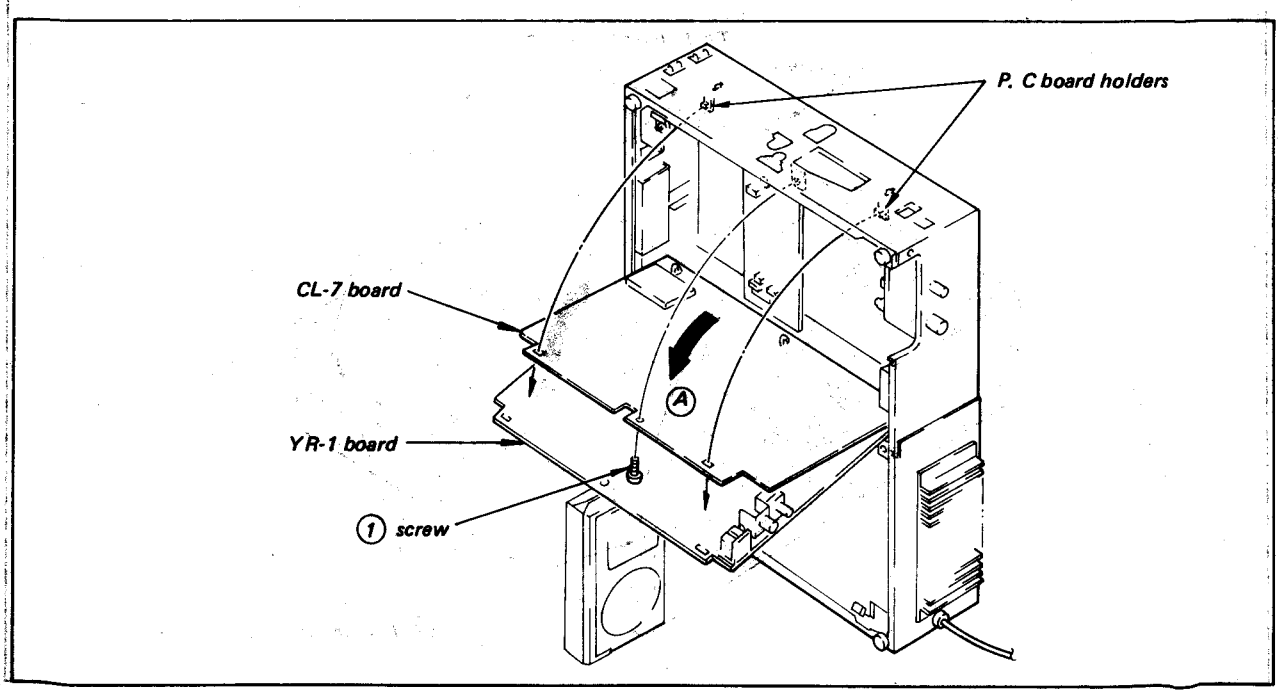

2-14. INTERNAL VIEWS

– Top Side –

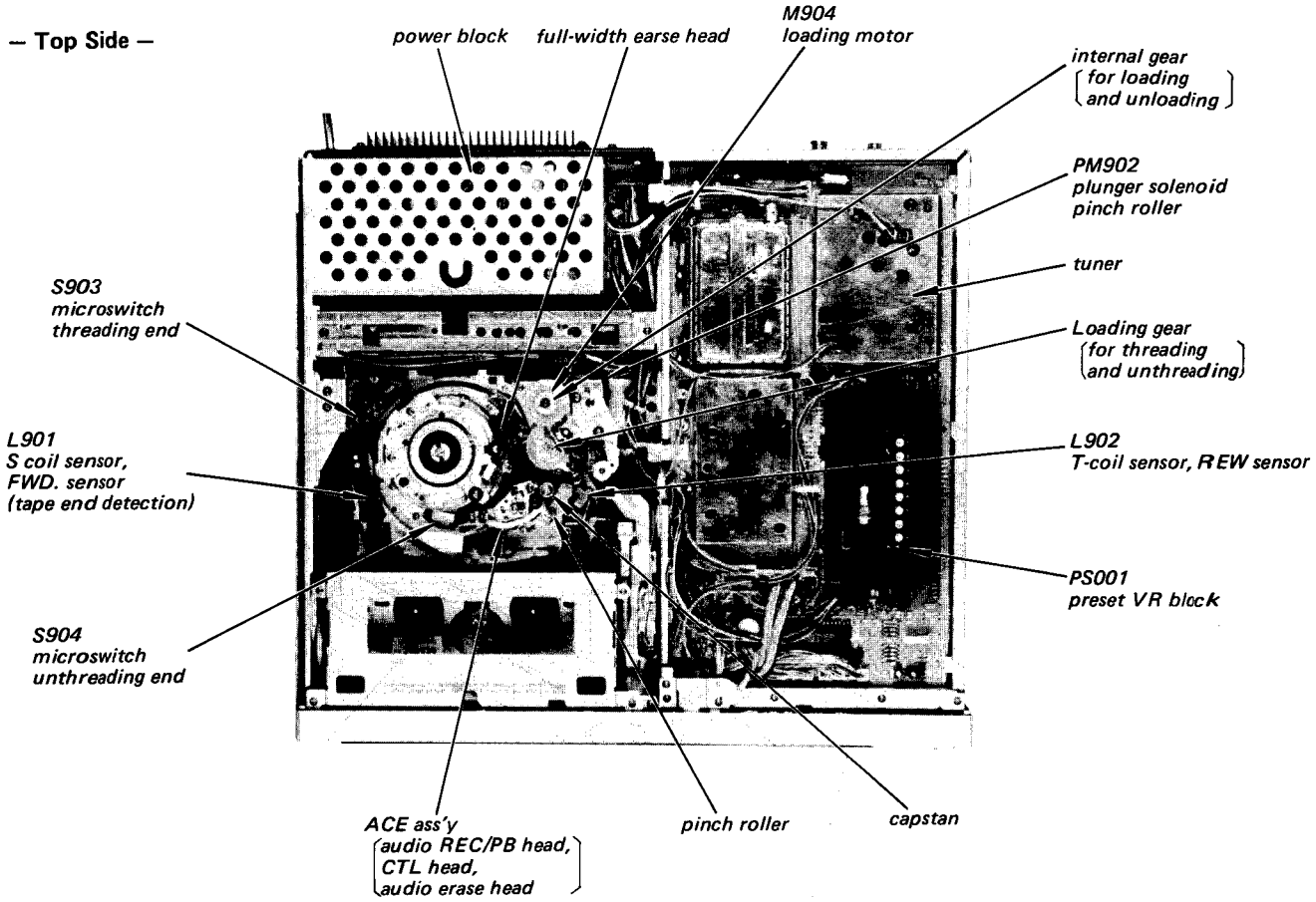

– Bottom Side –

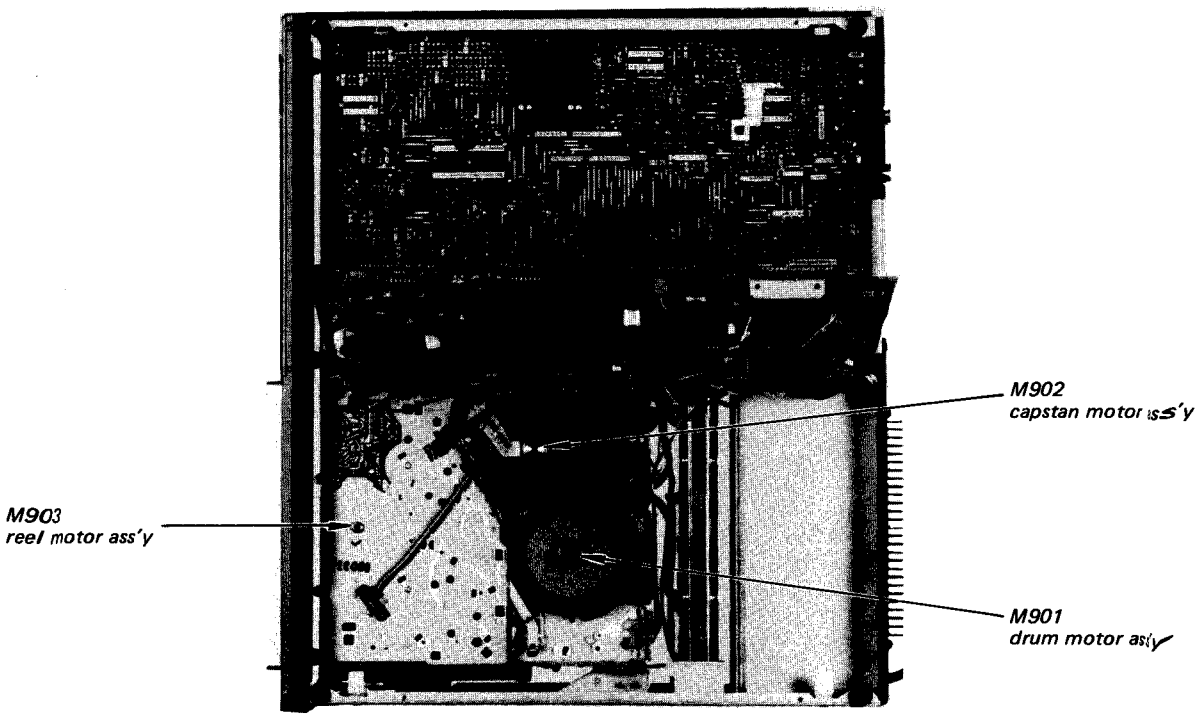

2-15. BOARD ARRANGEMENT

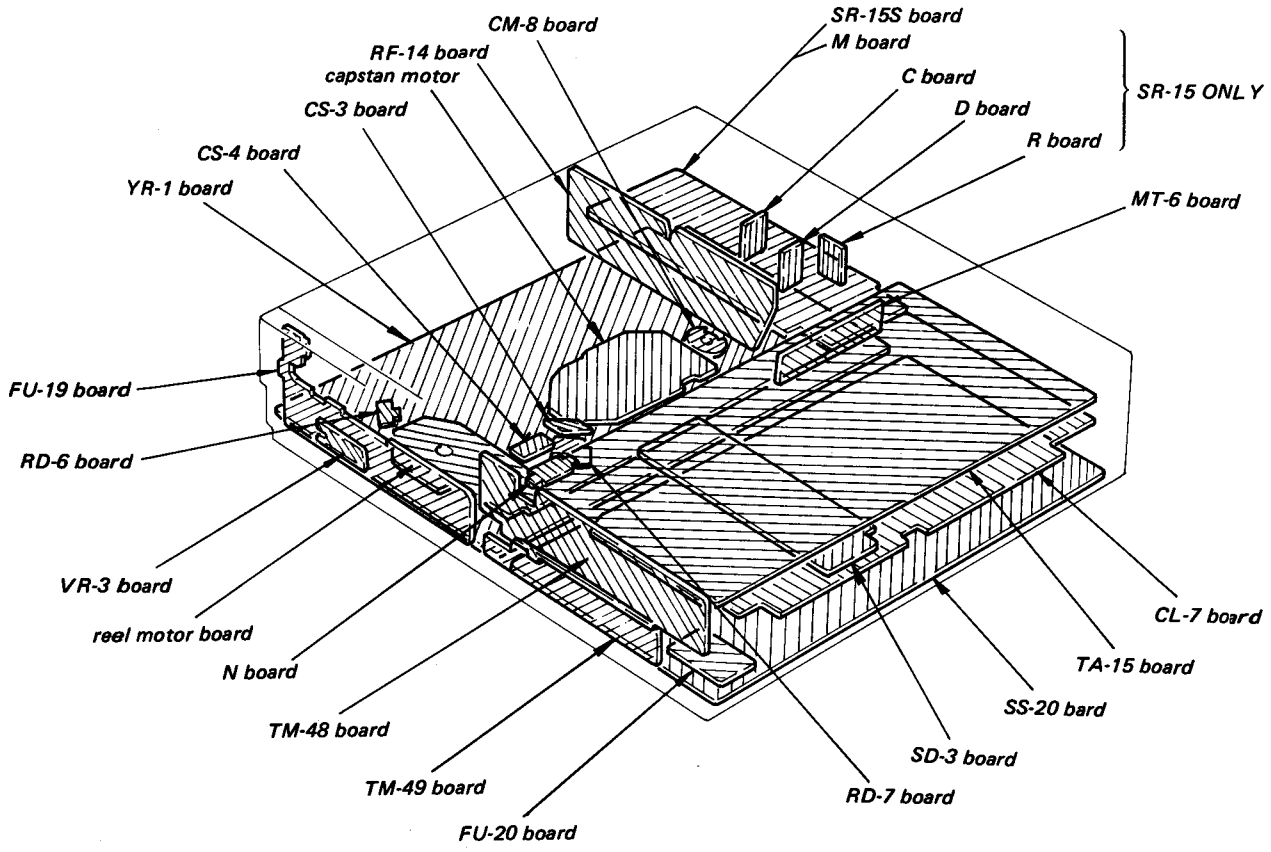

SECTION 3
DIAGRAMS

OVERALL BLOCK DIAGRAM

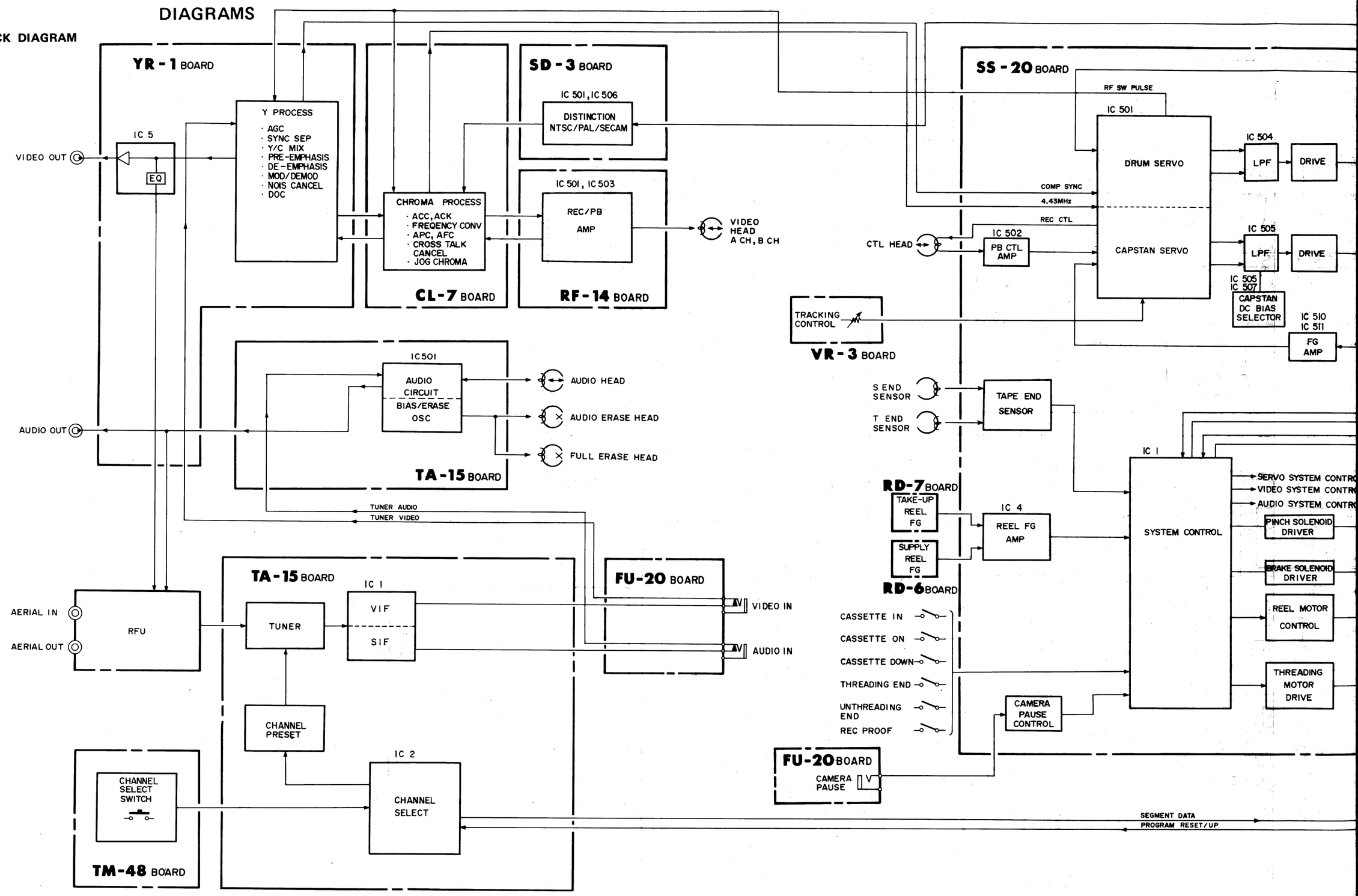

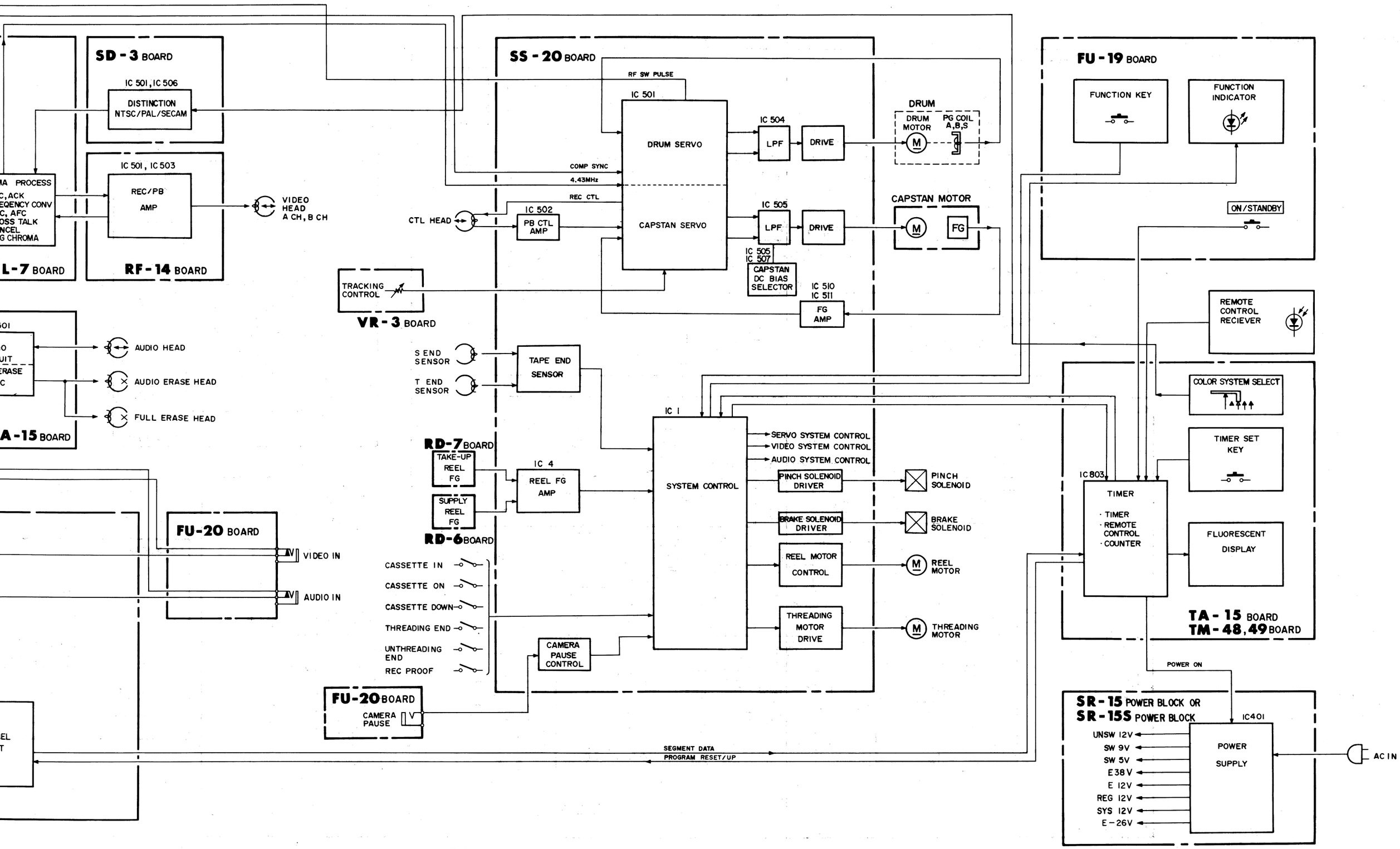
SD-3 BOARD
IC 501, IC 506
DISTINCTION NTSC/PAL/SECAM
IC 501, IC 503
REC/PB AMP
VIDEO HEAD A CH, B CH
L-7 BOARD
RF-14 BOARD
AUDIO HEAD
AUDIO ERASE HEAD
FULL ERASE HEAD
A-15 BOARD
FU-20 BOARD
VIDEO IN
AUDIO IN
SS-20 BOARD
RF SW PULSE
IC 501
DRUM SERVO
COMP SYNC
4.43MHz
REC CTL
CAPSTAN SERVO
IC 502
PB CTL AMP
CTL HEAD
IC 504
LPF
DRIVE
IC 505
IC 505 IC 507
CAPSTAN DC BIAS SELECTOR
IC 510 IC 511
FG AMP
DRUM
DRUM MOTOR
PG COIL A,B,S
CAPSTAN MOTOR
FG
TRACKING CONTROL
VR-3 BOARD
S END SENSOR
T END SENSOR
TAPE END SENSOR
RD-7 BOARD
TAKE-UP REEL FG
SUPPLY REEL FG
RD-6 BOARD
IC 4
REEL FG AMP
IC 1
SYSTEM CONTROL
SERVO SYSTEM CONTROL
VIDEO SYSTEM CONTROL
AUDIO SYSTEM CONTROL
PINCH SOLENOID DRIVER
BRAKE SOLENOID DRIVER
REEL MOTOR CONTROL
THREADING MOTOR DRIVE
PINCH SOLENOID
BRAKE SOLENOID
REEL MOTOR
THREADING MOTOR
CASSETTE IN
CASSETTE ON
CASSETTE DOWN
THREADING END
UNTHREADING END
REC PROOF
CAMERA PAUSE CONTROL
FU-20 BOARD
CAMERA PAUSE
SEGMENT DATA
PROGRAM RESET/UP
FU-19 BOARD
FUNCTION KEY
FUNCTION INDICATOR
ON/STANDBY
REMOTE CONTROL RECIEVER
COLOR SYSTEM SELECT
TIMER SET KEY
IC 803
TIMER
· TIMER
· REMOTE CONTROL
· COUNTER
FLUORESCENT DISPLAY
TA-15 BOARD
TM-48,49 BOARD
POWER ON
SR-15 POWER BLOCK OR
SR-15S POWER BLOCK
IC401
POWER SUPPLY
UNSW 12V
SW 9V
SW 5V
E 38V
E 12V
REG 12V
SYS 12V
E-26V
AC IN

VIDEO BLOCK DIAGRAM

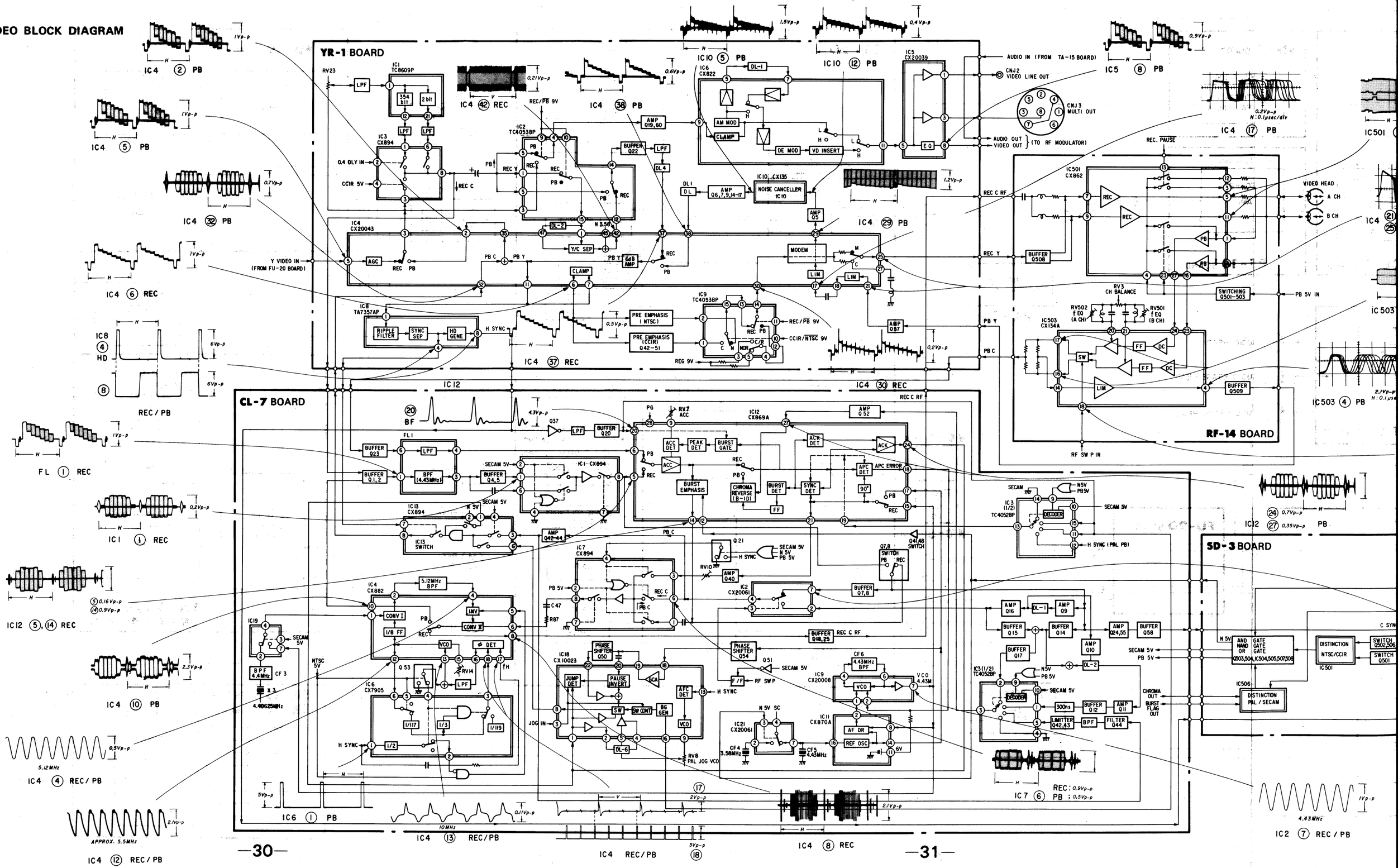

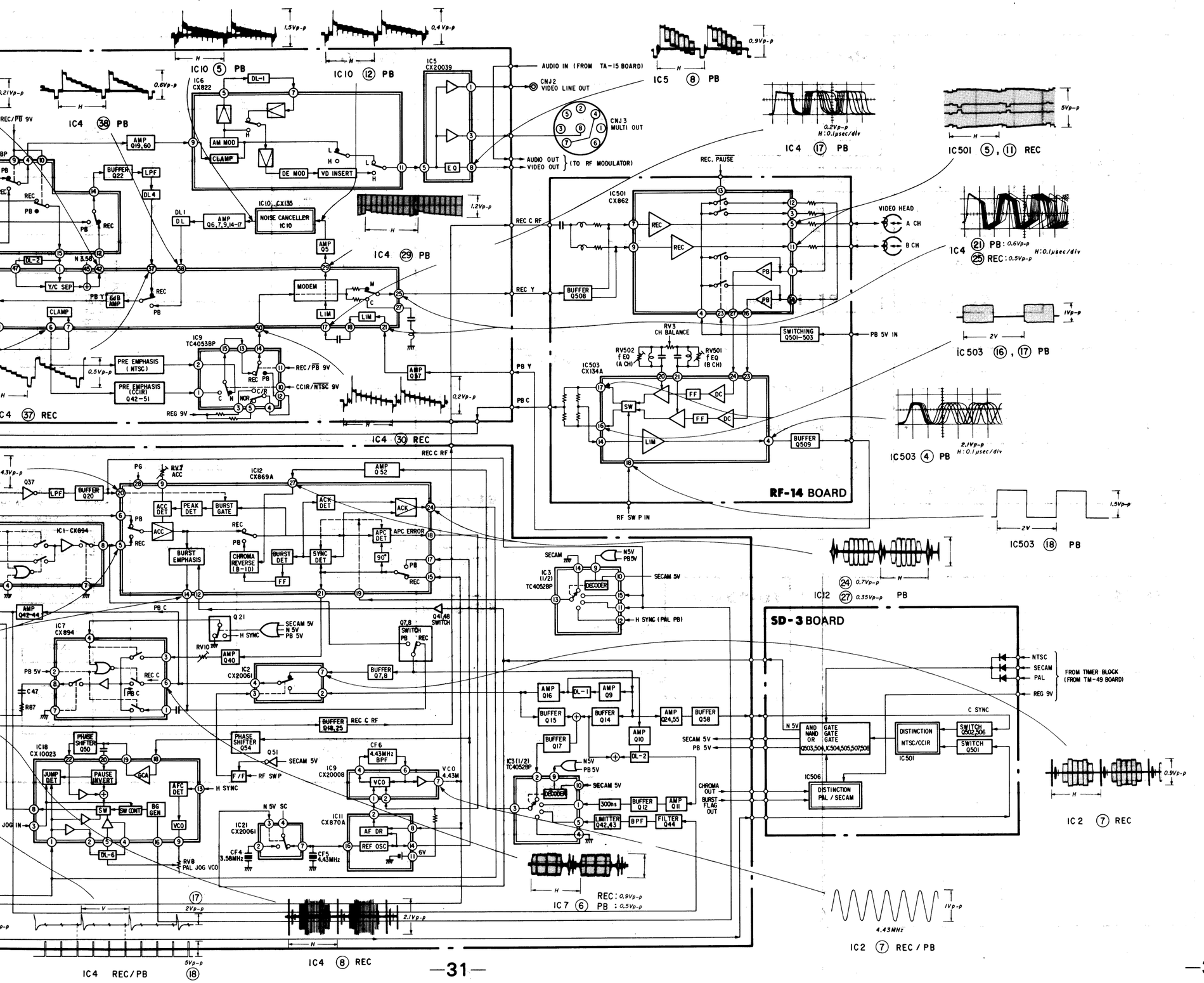

IC10 ⑤ PB
IC10 ⑫ PB
IC5 ⑧ PB
IC4 ㊳ PB
IC4 ⑰ PB
IC501 ⑤, ⑪ REC
IC4 ㉑ PB: 0.6Vp-p
㉕ REC: 0.5Vp-p
H: 0.1μsec/div
IC4 ㉙ PB
IC503 ⑯, ⑰ PB
IC503 ④ PB
IC503 ⑱ PB
IC12 ㉔ 0.7Vp-p
㉗ 0.35Vp-p PB
IC4 ㊲ REC
IC4 ㉚ REC
IC4 REC/PB ⑱
IC4 ⑧ REC
IC7 ⑥ REC: 0.9Vp-p
PB: 0.5Vp-p
IC2 ⑦ REC
IC2 ⑦ REC / PB
RF-14 BOARD
SD-3 BOARD
AUDIO IN (FROM TA-15 BOARD)
CNJ2 VIDEO LINE OUT
CNJ3 MULTI OUT
AUDIO OUT
VIDEO OUT
(TO RF MODULATOR)
VIDEO HEAD
A CH
B CH
REC. PAUSE
REC C RF
REC Y
PB Y
PB C
PB 5V IN
RF SW P IN
NOISE CANCELLER IC10
PRE EMPHASIS (NTSC)
PRE EMPHASIS (CCIR) Q42-51
REC/PB 9V
CCIR/NTSC 9V
REG 9V
SECAM 5V
H SYNC (PAL PB)
FROM TIMER BLOCK (FROM TM-49 BOARD)
NTSC
SECAM
PAL
REG 9V
C SYNC
DISTINCTION NTSC/CCIR
DISTINCTION PAL / SECAM
CHROMA OUT
BURST FLAG OUT

SERVO BLOCK DIAGRAM

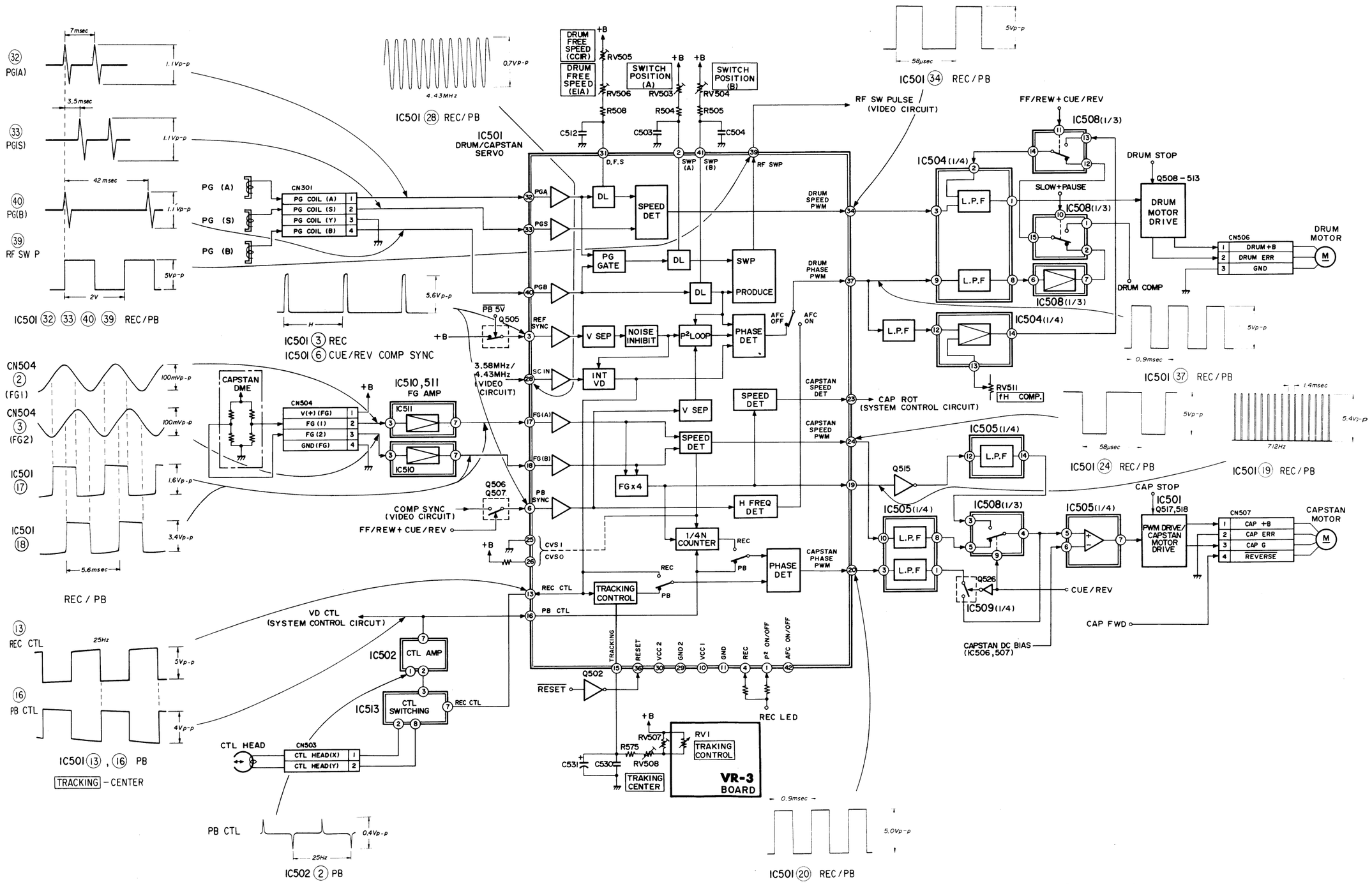

SYSTEM CONTROL BLOCK DIAGRAM

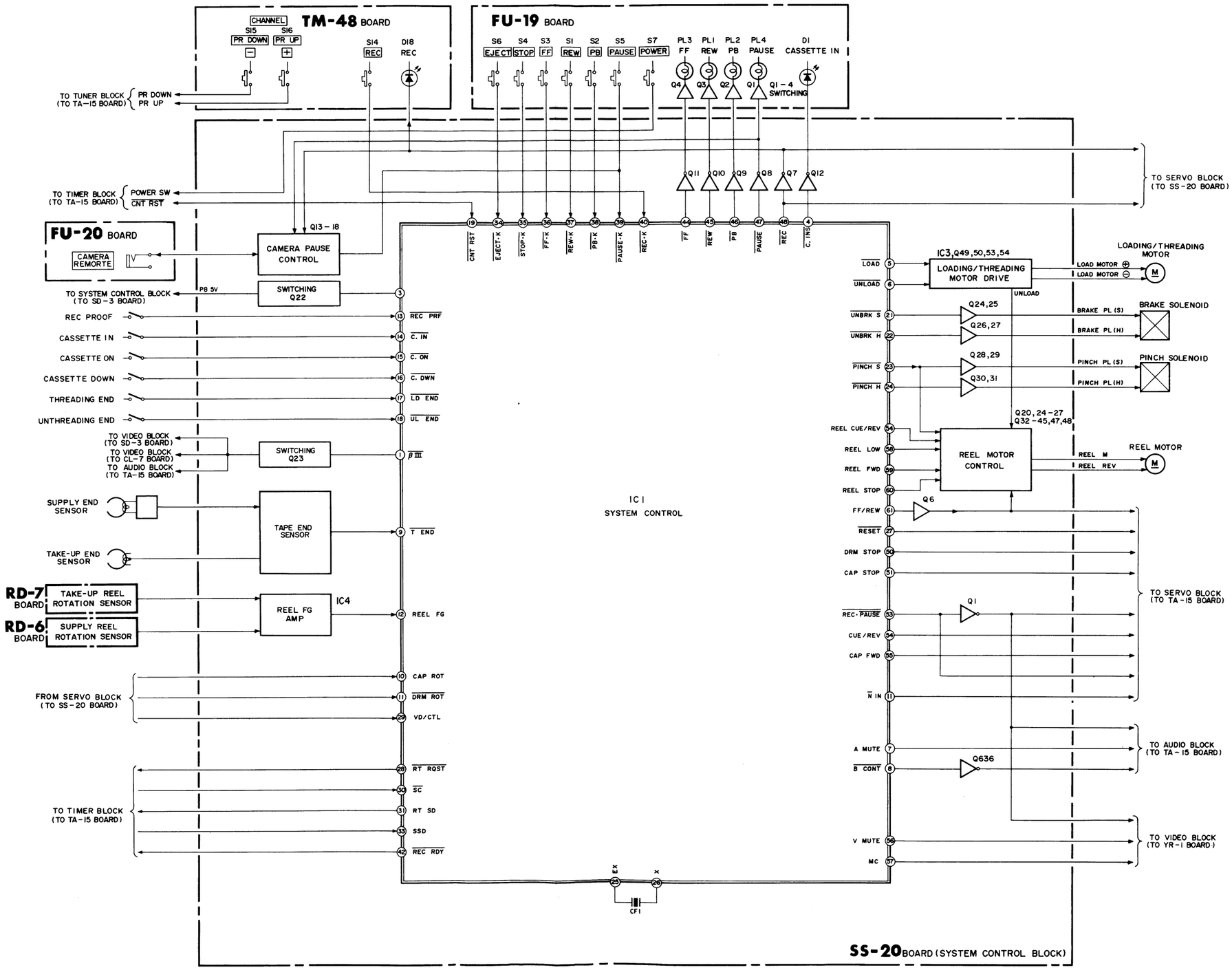

SYSTEM CONTROL CIRCUIT AND MECHANISM BLOCK INTERFACE

SIGNAL	I/O	Pin No.	EJECTED	LOADING	THREADING	STOP	UN-THREADING	UN-LOADING	FF	REW	PB	PB·PAUSE	PICTURE SEARCH CUE	PICTURE SEARCH REV	REC	REC·PAUSE	TIMER REC	FR SEARCH CUE	FR SEARCH REV
$\overline{\text{REC PROOF}}$	I	IC1 13 pin	H	H	H/L	H/L	H/L	H	H/L	H/L	H/L	H/L	H/L	H/L	L	L	L	H/L	H/L
$\overline{\text{C·IN}}$	I	IC1 14pin	H	L	L	L	L	L	L	L	L	L	L	L	L	L	L	L	L
$\overline{\text{C·ON}}$	I	IC1 15pin	H	L	L	L	L	L	L	L	L	L	L	L	L	L	L	L	L
$\overline{\text{C·DWN}}$	I	IC1 16pin	H	H	L	L	L	H	L	L	L	L	L	L	L	L	L	L	L
$\overline{\text{LD END}}$	I	IC1 17pin	H	H	H	L	H	H	L	L	L	L	L	L	L	L	L	L	L
$\overline{\text{UL END}}$	I	IC1 18pin	L	L	H	H	H	L	H	H	H	H	H	H	H	H	H	H	H
$\overline{\text{UNBRK S}}$	O	IC1 21pin	H	H	H	H	H	H	H	H	H	H	H	H	H	H	H	H	H
$\overline{\text{UNBRK H}}$	O	IC1 22pin	H	H	L	H	L	H	L	L	L	L	L	L	L	H	L	L	L
$\overline{\text{PINCH S}}$	O	IC1 23pin	H	H	H	H	H	H	H	H	H	H	H	H	H	H	H	H	H
$\overline{\text{PINCH H}}$	O	IC1 24pin	H	L	H	H	H	L	H	H	L	L	L	L	L	H	L	H	H
$\overline{\text{LOAD}}$	O	IC1 5pin	H	L	L	H	H	H	H	H	H	H	H	H	H	H	H	H	H
$\overline{\text{UNLOAD}}$	O	IC1 6pin	H	H	H	H	L	L	H	H	H	H	H	H	H	H	H	H	H

SYSTEM CONTROL CIRCUIT AND REMOTE CONTROL/TIMER CIRCUIT INTERFACE

SIGNAL	I/O	Pin No.	STOP	FF	REW	PB	PB·PAUSE	PICTURE SEARCH CUE	PICTURE SEARCH REV	REC	REC·PAUSE	TIMER REC	FR SEARCH CUE	FR SEARCH REV
$\overline{\text{RT RQST}}$	I	IC1 28pin												
RTSD	I	IC1 31pin												
$\overline{\text{COUNTER RESET}}$	I	IC1 19pin												
SSD	O	IC1 33pin												
$\overline{\text{SC}}$	O	IC1 30pin												
$\overline{\text{REC READY}}$	O	IC1 42pin	H/L	H	H	H	H	H	H	H	H	L	H	H

SYSTEM CONTROL CIRCUIT AN

SIGNAL	I/O	Pin No
$\overline{\text{EJECT·K}}$	I	IC1 34
$\overline{\text{STOP·K}}$	I	IC1 35
$\overline{\text{FF·K}}$	I	IC1 36
$\overline{\text{REW·K}}$	I	IC1 37
$\overline{\text{PB·K}}$	I	IC1 38
$\overline{\text{PAUSE·K}}$	I	IC1 39
$\overline{\text{REC·K}}$	I	IC1 40
$\overline{\text{FF}}$	O	IC1 44
$\overline{\text{REW}}$	O	IC1 45
$\overline{\text{PB}}$	O	IC1 46
$\overline{\text{PAUSE}}$	O	IC1 47
$\overline{\text{REC}}$	O	IC1 48
$\overline{\text{C·IN}}$	O	IC1 4

SYSTEM CONTROL CIRCUIT AN

SIGNAL	I/O	Pin No
TEND*1	I	IC1 9
$\overline{\text{REW}}$	O	IC1 45

*1 "L" at tape end.

REW	PB	PB· PAUSE	PICTURE SEARCH		REC	REC· PAUSE	TIMER REC	FR SEARCH	
			CUE	REV				CUE	REV
H/L	H/L	H/L	H/L	H/L	L	L	L	H/L	H/L
L	L	L	L	L	L	L	L	L	L
L	L	L	L	L	L	L	L	L	L
L	L	L	L	L	L	L	L	L	L
L	L	L	L	L	L	L	L	L	L
H	H	H	H	H	H	H	H	H	H
H	H	H	H	H	H	H	H	H	H
L	L	L	L	L	L	H	L	L	L
H	H	H	H	H	H	H	H	H	H
H	L	L	L	L	L	H	L	H	H
H	H	H	H	H	H	H	H	H	H
H	H	H	H	H	H	H	H	H	H

REC	REC· PAUSE	TIMER REC	FR SEARCH	
			CUE	REV
H	H	L	H	H

SYSTEM CONTROL CIRCUIT AND FUNCTION BLOCK INTERFACE

SIGNAL \ MODE	I/O	Pin No.	STOP	FF	REW	PB	PB· PAUSE	PICTURE SEARCH		REC	REC· PAUSE	TIMER REC	FR SEARCH	
								CUE	REV				CUE	REV
$\overline{\text{EJECT·K}}$	I	IC1 34pin	H	H	H	H	H	H	H	H	H	H	H	H
$\overline{\text{STOP·K}}$	I	IC1 35pin	H	H	H	H	H	H	H	H	H	H	H	H
$\overline{\text{FF·K}}$	I	IC1 36pin	H	H	H	H	H	L	H	H	H	H	L	H
$\overline{\text{REW·K}}$	I	IC1 37pin	H	H	H	H	H	H	L	H	H	H	H	L
$\overline{\text{PB·K}}$	I	IC1 38pin	H	H	H	H	H	H	H	H	H	H	H	H
$\overline{\text{PAUSE·K}}$	I	IC1 39pin	H	H	H	H	H	H	H	H	H	H	H	H
$\overline{\text{REC·K}}$	I	IC1 40pin	H	H	H	H	H	H	H	H	H	H	H	H
$\overline{\text{FF}}$	O	IC1 44pin	H	L	H	H	H	L	H	H	H	H	L	H
$\overline{\text{REW}}$	O	IC1 45pin	H	H	L	H	H	H	L	H	H	H	H	L
$\overline{\text{PB}}$	O	IC1 46pin	H	H	H	L	L	L	L	H	H	H	L	L
$\overline{\text{PAUSE}}$	O	IC1 47pin	H	H	H	H	L	H	H	H	L	H	H	H
$\overline{\text{REC}}$	O	IC1 48pin	H	H	H	H	H	H	H	L	L	L	H	H
$\overline{\text{C·IN}}$	O	IC1 4pin	L	L	L	L	L	L	L	L	L	L	L	L

SYSTEM CONTROL CIRCUIT AND ITS PERIPHERAL CIRCUIT INTERFACE

SIGNAL \ MODE	I/O	Pin No.	STOP	FF	REW	PB	PB· PAUSE	PICTURE SEARCH		REC	REC· PAUSE	TIMER REC	FR SEARCH	
								CUE	REV				CUE	REV
TEND*1	I	IC1 9pin	H	H	H	H	H	H	H	H	H	H	H	H
$\overline{\text{REW}}$	O	IC1 45pin	H	H	L	H	H	H	L	H	H	H	H	L

*1 "L" at tape end.

SYSTEM CONTROL CIRCUIT AND REEL MOTOR CONTROL CIRCUIT INTERFACE

SIGNAL	I/O	Pin No.	EJECTED	LOADING	THREADING	STOP	UN-THREADING	UN-LOADING	FF	REW	PB	PB·PAUSE	PICTURE SEARCH CUE	PICTURE SEARCH REV	REC	REC·PAUSE	TIMER REC	FR SEARCH CUE	FR SEARCH REV
REEL ROT	I	IC1 12pin																	
REEL LOW	O	IC1 58pin	L	L	H	L	H	L	L	L	H	H	L	L	H	H	H	H	H
REEL FWD	O	IC1 59pin	H	H	H	H	L	H	H	L	H	H	H	L	H	H	H	H	L
REEL STOP	O	IC1 60pin	H	H	L	H	L	H	L	L	L	H	L	L	L	H	L	L	L
$\overline{\text{FF / REW}}$	O	IC1 61pin	H	H	H	H	H	H	L	L	H	H	H	H	H	H	H	L	L
$\overline{\text{CUE / REV}}$	O	IC1 54pin	H	H	H	H	H	H	H	H	H	H	L	L	H	H	H	H	H
$\overline{\text{PINCH S}}$	O	IC1 23pin	H	H	H	H	H	H	H	H	H	H	H	H	H	H	H	H	H
$\overline{\text{UNLOAD}}$	O	IC1 6pin	H	H	H	H	L	L	H	H	H	H	H	H	H	H	H	H	H
$\overline{\text{LOAD}}$	O	IC1 5pin	H	L	L	H	H	H	H	H	H	H	H	H	H	H	H	H	H
$\overline{\text{REW}}$	O	IC1 45pin	H	H	H	H	H	H	H	L	H	H	H	L	H	H	H	H	L

SYSTEM CONTROL CIRCUIT AND VIDEO CIRCUIT INTERFACE

SIGNAL	I/O	Pin No.	STOP (E-E)	FF	REW	PB	PB·PAUSE	PICTURE SEARCH CUE	PICTURE SEARCH REV	REC	REC·PAUSE	TIMER REC	FR SEARCH CUE	FR SEARCH REV
V MUTE	O	IC1 56pin	L	L	L	L	L	L	L	L	L	L	L	L
$\overline{\text{JOG}}$	O	IC1 57pin	H	H	H	H	L	L	L	H	H	H	L	L
$\overline{\text{REC·PAUSE}}$	O	IC1 53pin	H	H	H	H	H	H	H	L	H	L	H	H
$\overline{\text{PB OUT}}$	O	IC1 3pin	H	H	H	L	L	L	L	H	H	H	L	L
$\overline{\beta\text{III}}$	O	IC1 1pin	H/L	H/L	H/L	H/L	H/L	H/L	H/L	H/L	H/L	H/L	H/L	H/L
$\overline{\text{FF / REW}}$	O	IC1 61pin	H	L	L	H	H	H	H	H	H	H	L	L
$\overline{\text{CUE / REV}}$	O	IC1 54pin	H	H	H	H	H	L	L	H	H	H	H	H

SYSTEM CONTROL CIRCUIT AND SERVO CIRCUIT INTERFA

SIGNAL	I/O	Pin No.	STOP	FF	REW
CAP ROT	I	IC1 10pin	L	L	L
VD/CTL	I	IC1 29pin		CTL	CTL
DRUM STOP	O	IC1 50pin	H	L	L
CAP STOP	O	IC1 51pin	H	H	H
$\overline{\text{PB OUT}}$	O	IC1 3pin	H	H	H
$\overline{\text{REC·PAUSE}}$	O	IC1 53pin	H	H	H
$\overline{\text{CUE/REV}}$	O	IC1 54pin	H	H	H
CAP FWD	O	IC1 55pin	H	H	H
$\overline{\text{194 RESET}}$*1	O	IC1 27pin	H	H	H
RF SW PULSE	I	IC1 20pin			

*1 Reset signal for CX194.

SYSTEM CONTROL CIRCUIT AND AUDIO CIRCUIT INTERFA

SIGNAL	I/O	Pin No.	STOP (E-E)	FF	REW
A MUTE	O	IC1 41pin	L	L	L
$\overline{\text{REC·PAUSE}}$	O	IC1 53pin	H	H	H
$\overline{\text{PB}}$	O	IC1 3pin	H	H	H
$\overline{\text{PAUSE}}$	O	IC1 47pin	H	H	H
DRUM STOP	O	IC1 50pin	H	L	L

SYSTEM CONTROL CIRCUIT AND DISTINCTION CIRCUIT IN

SIGNAL	I/O	Pin No.	STOP (E-E)	FF	REW
$\overline{\text{PB OUT}}$	O	IC1 3pin	H	H	H
$\overline{\beta\text{III}}$	O	IC1 1pin	H/L	H/L	H/L

B	PB· PAUSE	PICTURE SEARCH		REC	REC· PAUSE	TIMER REC	FR SEARCH	
		CUE	REV				CUE	REV
H	H	L	L	H	H	H	H	H
H	H	H	L	H	H	H	H	L
L	H	L	L	L	H	L	L	L
H	H	H	H	H	H	H	L	L
H	H	L	L	H	H	H	H	H
H	H	H	H	H	H	H	H	H
H	H	H	H	H	H	H	H	H
H	H	H	H	H	H	H	H	H
H	H	H	L	H	H	H	H	L

EC· USE	TIMER REC	FR SEARCH	
		CUE	REV
L	L	L	L
H	H	L	L
H	L	H	H
H	H	L	L
/L	H/L	H/L	H/L
H	H	L	L
H	H	H	H

SYSTEM CONTROL CIRCUIT AND SERVO CIRCUIT INTERFACE

SIGNAL \ MODE	I/O	Pin No.	STOP	FF	REW	PB	PB· PAUSE	PICTURE SEARCH		REC	REC· PAUSE	TIMER REC	FR SEARCH	
								CUE	REV				CUE	REV
CAP ROT	I	IC1 10pin	L	L	L	H	H	H	H	H	H	H	L	L
VD/CTL	I	IC1 29pin		CTL	CTL	CTL		CTL	CTL	VD		VD	CTL	CTL
DRUM STOP	O	IC1 50pin	H	L	L	L	L	L	L	L	L	L	L	L
CAP STOP	O	IC1 51pin	H	H	H	L	L	L	L	L	L	L	H	H
$\overline{\text{PB OUT}}$	O	IC1 3pin	H	H	H	L	L	L	L	H	H	H	L	L
$\overline{\text{REC·PAUSE}}$	O	IC1 53pin	H	H	H	H	H	H	H	L	H	L	H	H
$\overline{\text{CUE/REV}}$	O	IC1 54pin	H	H	H	H	H	L	L	H	H	H	H	H
CAP FWD	O	IC1 55pin	H	H	H	H	H	H	L	H	H	H	H	H
$\overline{\text{194 RESET}}$*1	O	IC1 27pin	H	H	H	H	H	H	H	H	H	H	H	H
RF SW PULSE	I	IC1 20pin												

*1 Reset signal for CX194.

SYSTEM CONTROL CIRCUIT AND AUDIO CIRCUIT INTERFACE

SIGNAL \ MODE	I/O	Pin No.	STOP (E-E)	FF	REW	PB	PB· PAUSE	PICTURE SEARCH		REC	REC· PAUSE	TIMER REC	FR SEARCH	
								CUE	REV				CUE	REV
A MUTE	O	IC1 41pin	L	L	L	L	H	H	H	L	L	L	H	H
$\overline{\text{REC·PAUSE}}$	O	IC1 53pin	H	H	H	H	H	H	H	L	H	L	H	H
$\overline{\text{PB}}$	O	IC1 3pin	H	H	H	L	L	L	L	H	H	H	L	L
$\overline{\text{PAUSE}}$	O	IC1 47pin	H	H	H	H	L	H	H	H	L	H	H	H
DRUM STOP	O	IC1 50pin	H	L	L	L	L	L	L	L	L	L	L	L

SYSTEM CONTROL CIRCUIT AND DISTINCTION CIRCUIT INTERFACE

SIGNAL \ MODE	I/O	Pin No.	STOP (E-E)	FF	REW	PB	PB· PAUSE	PICTURE SEARCH		REC	REC· PAUSE	TIMER REC	FR SEARCH	
								CUE	REV				CUE	REV
$\overline{\text{PB OUT}}$	O	IC1 3pin	H	H	H	L	L	L	L	H	H	H	L	L
$\overline{\beta\text{III}}$	O	IC1 1pin	H/L	H/L	H/L	H/L	H/L	H/L	H/L	H/L	H/L	H/L	H/L	H/L

CAPSTAN PHASE SYSTEM TIMING CHART (REC)...CCIR ONLY

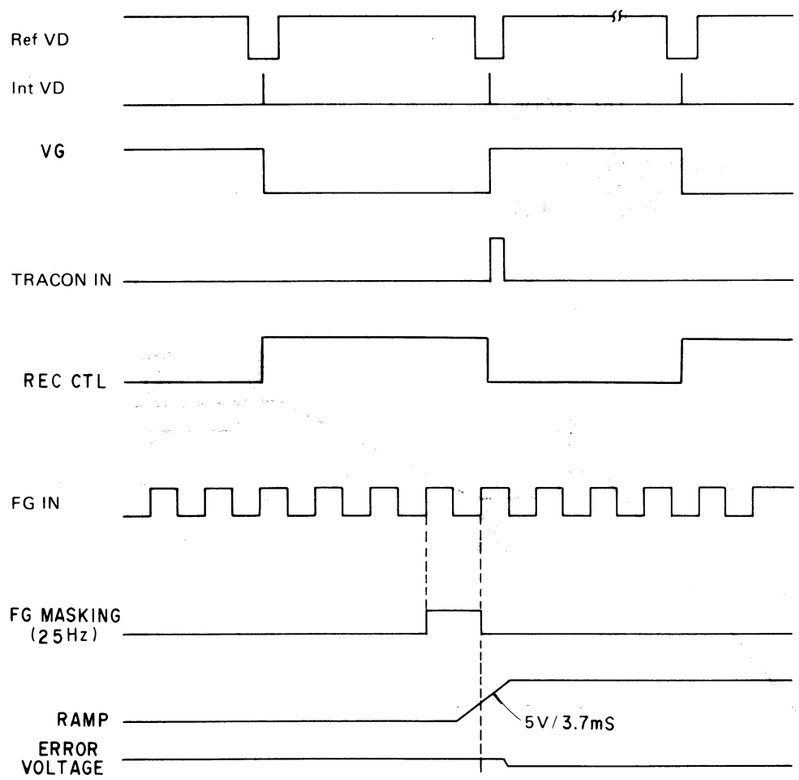

CAPSTAN PHASE SYSTEM TIMING CHART (PB)

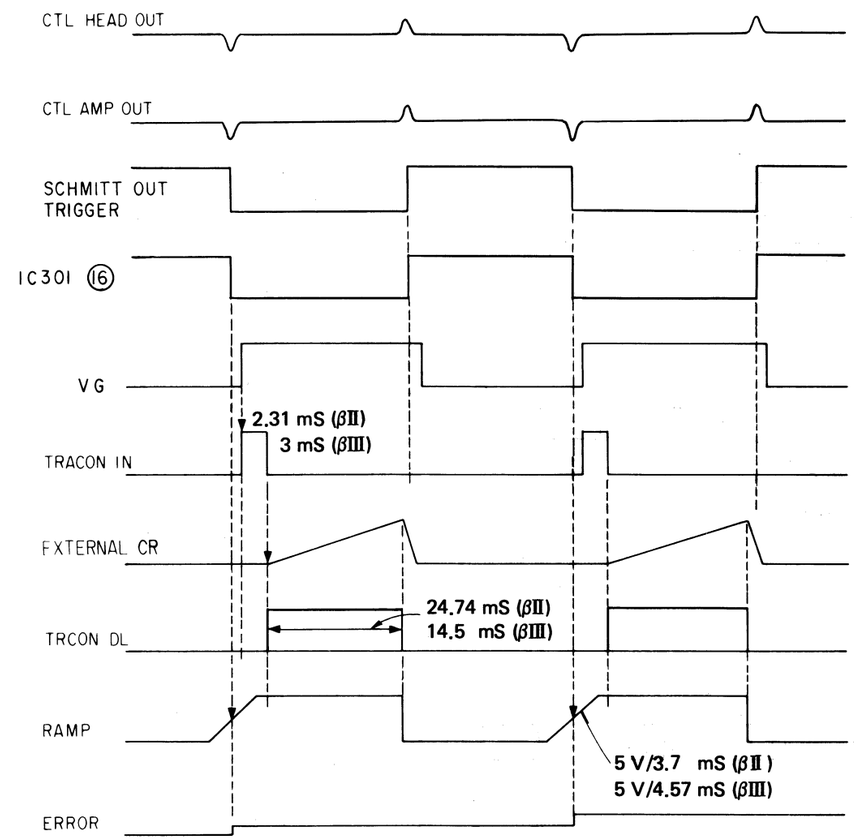

CAPSTAN SPEED SYSTEM TIMING CHART

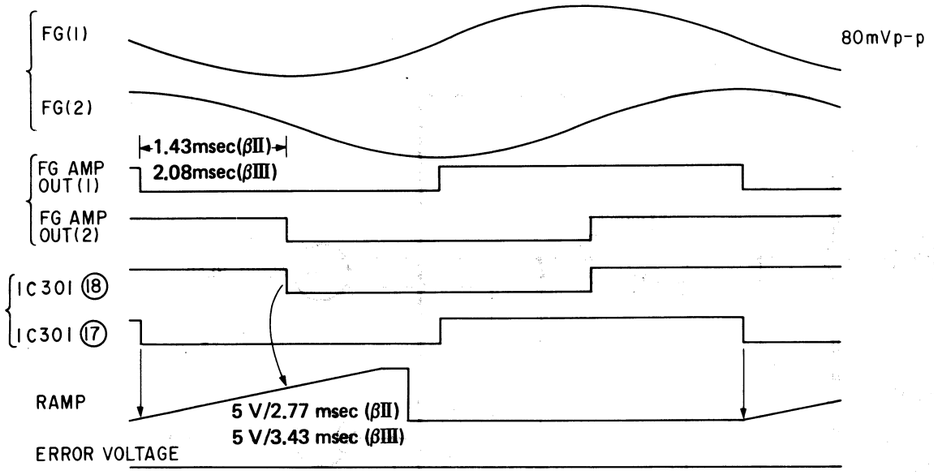

DRUM PHASE SYSTEM TIMING CHART

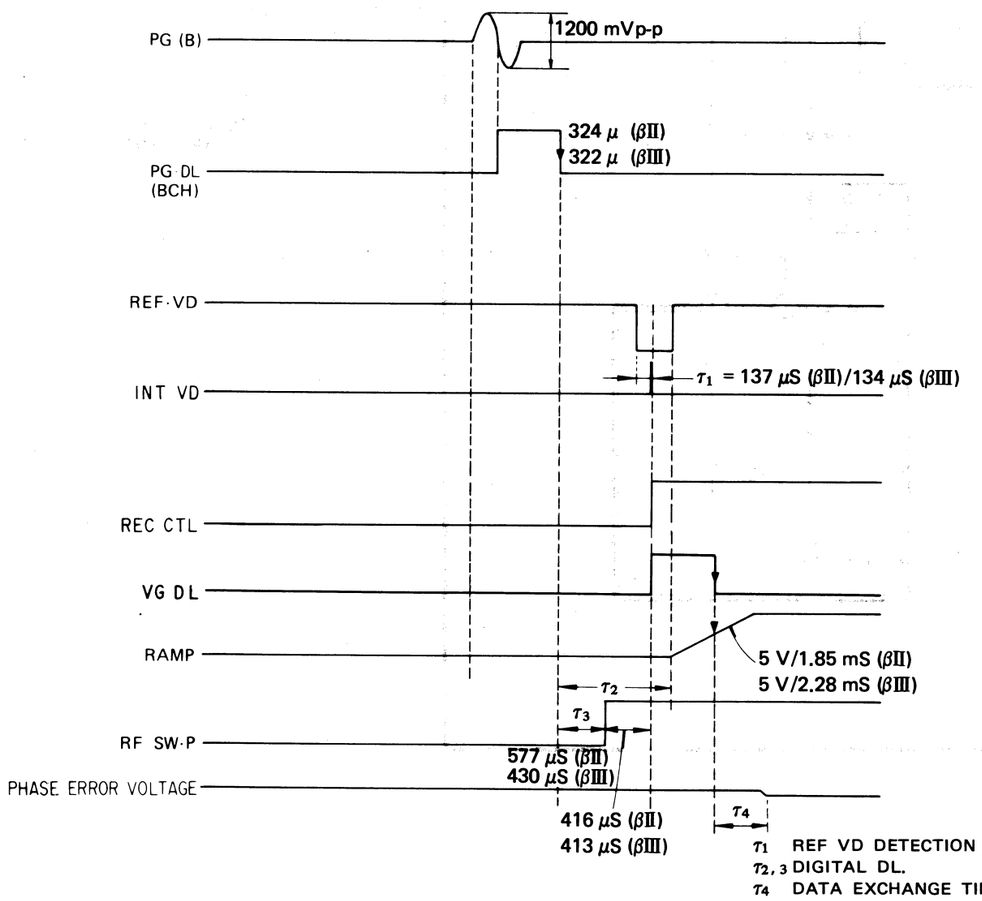

DRUM SPEED SYSTEM TIMING CHART

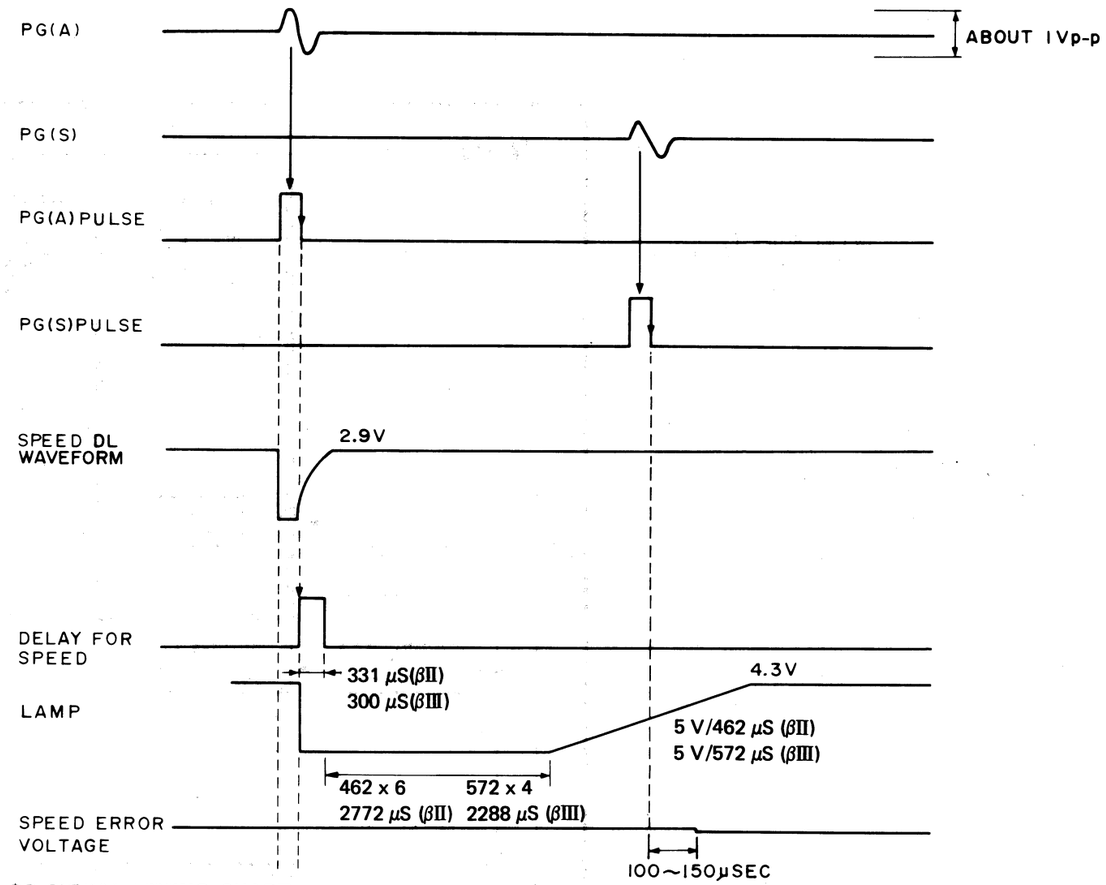

PG SIGNAL TIMING CHART

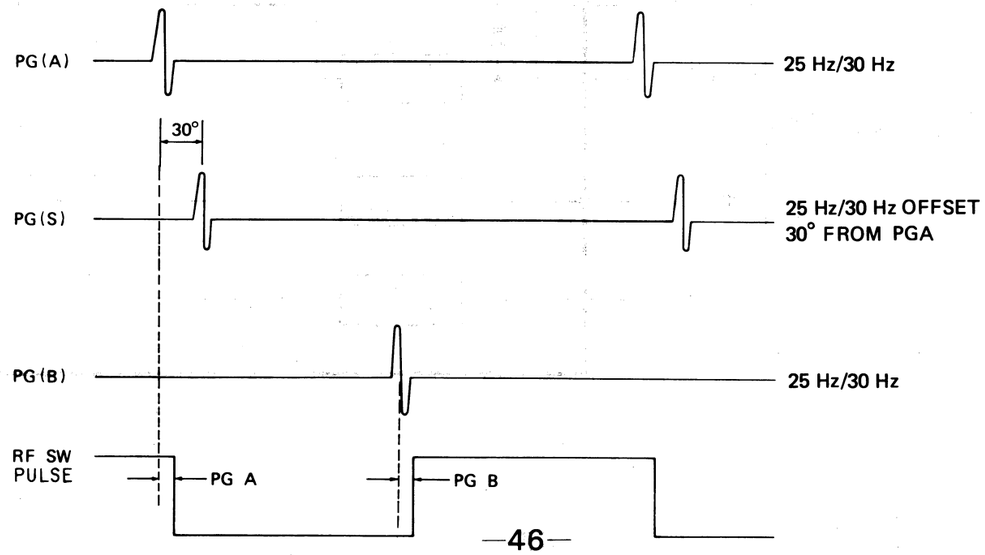

AUDIO BLOCK DIAGRAM

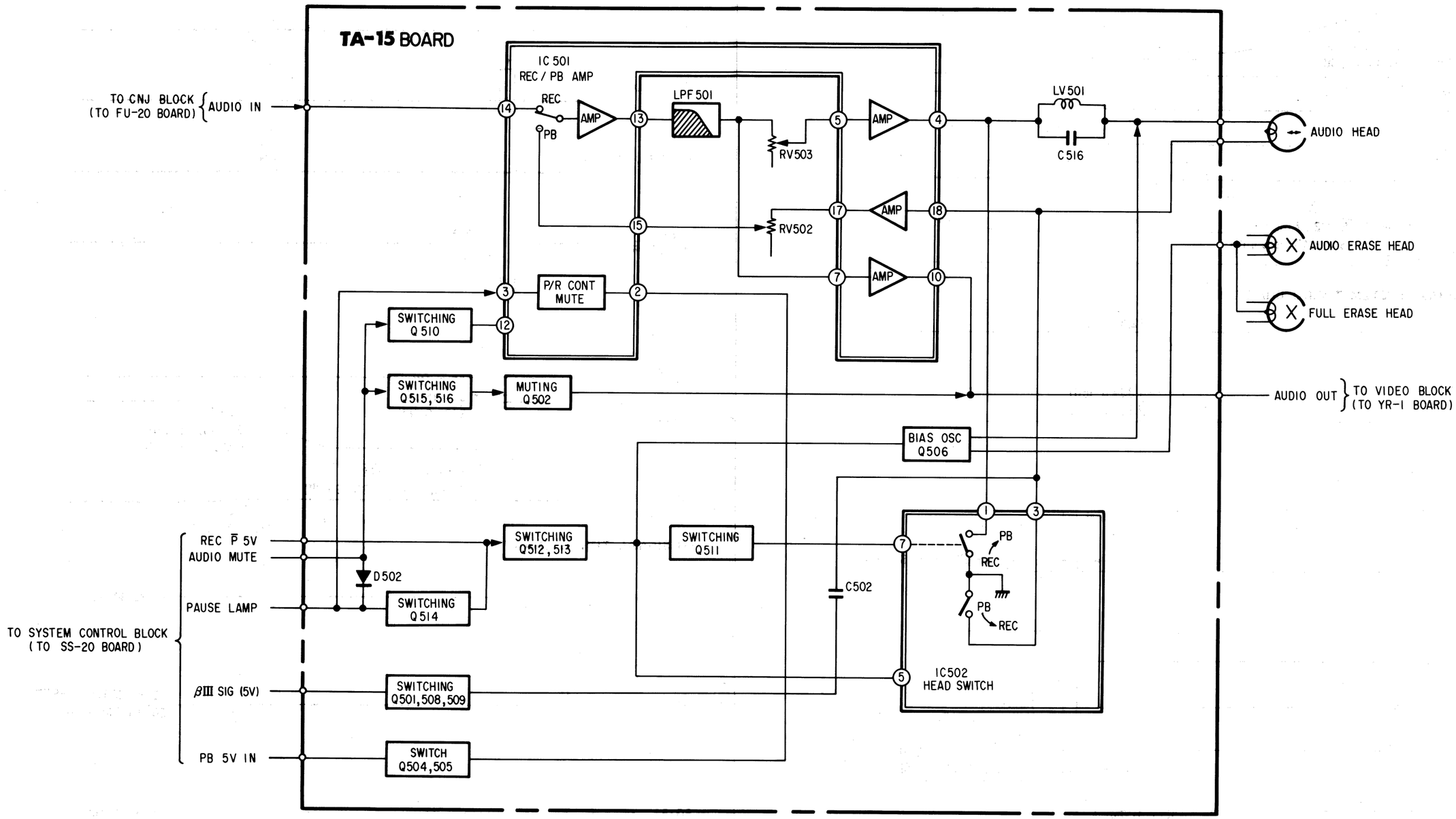

AUDIO LEVE

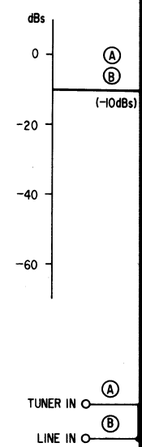

AUDIO LEVEL DIAGRAM (REC)

REC MODE

0dBs=0.775Vrms
f=333Hz
BIAS OSC : STOPPED

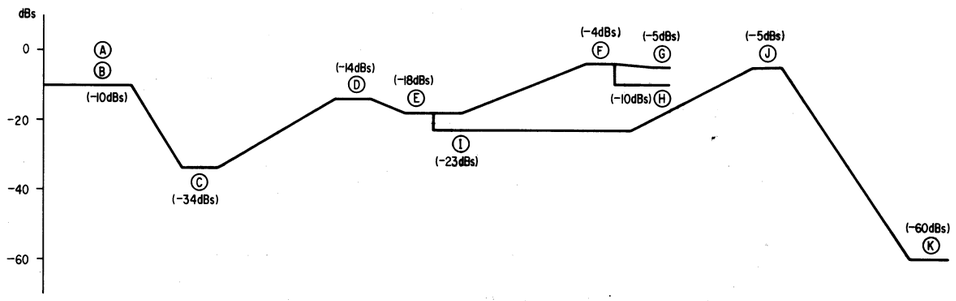

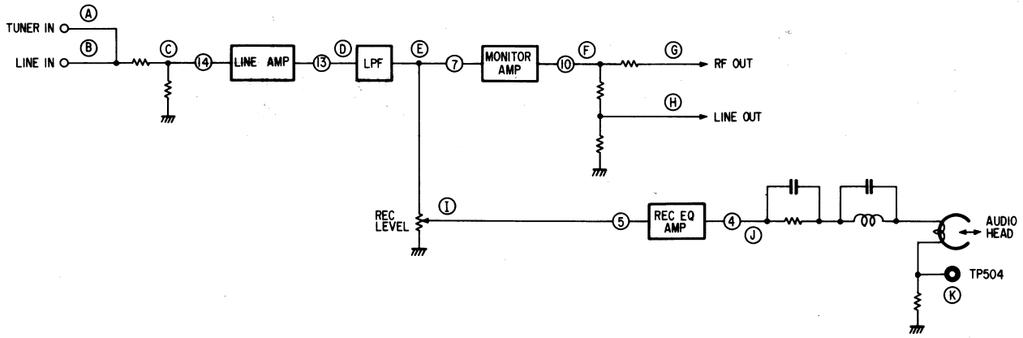

AUDIO LEVEL DIAGRAM (PB)

PB MODE

0dBs=0.775Vrms
f=333Hz
BIAS OSC : STOPPED

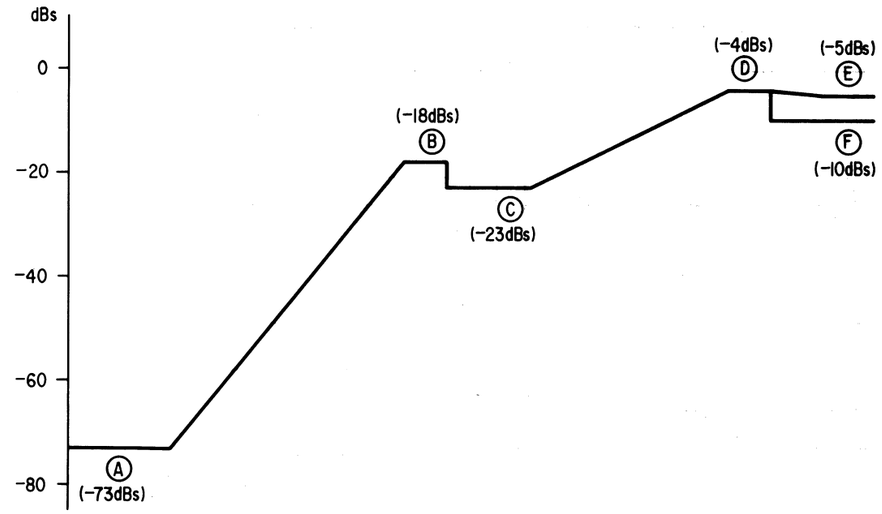

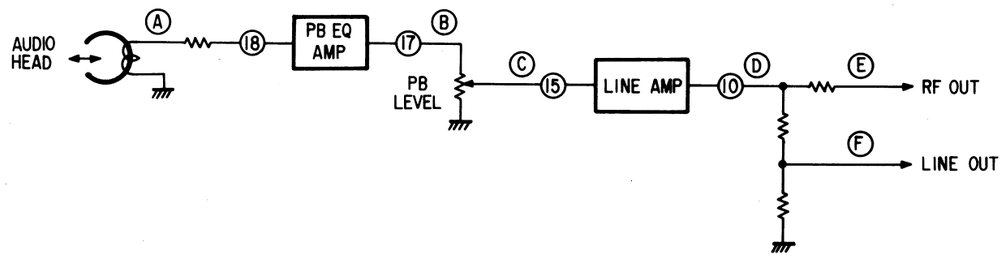

TIMER BLOCK DIAGRAM

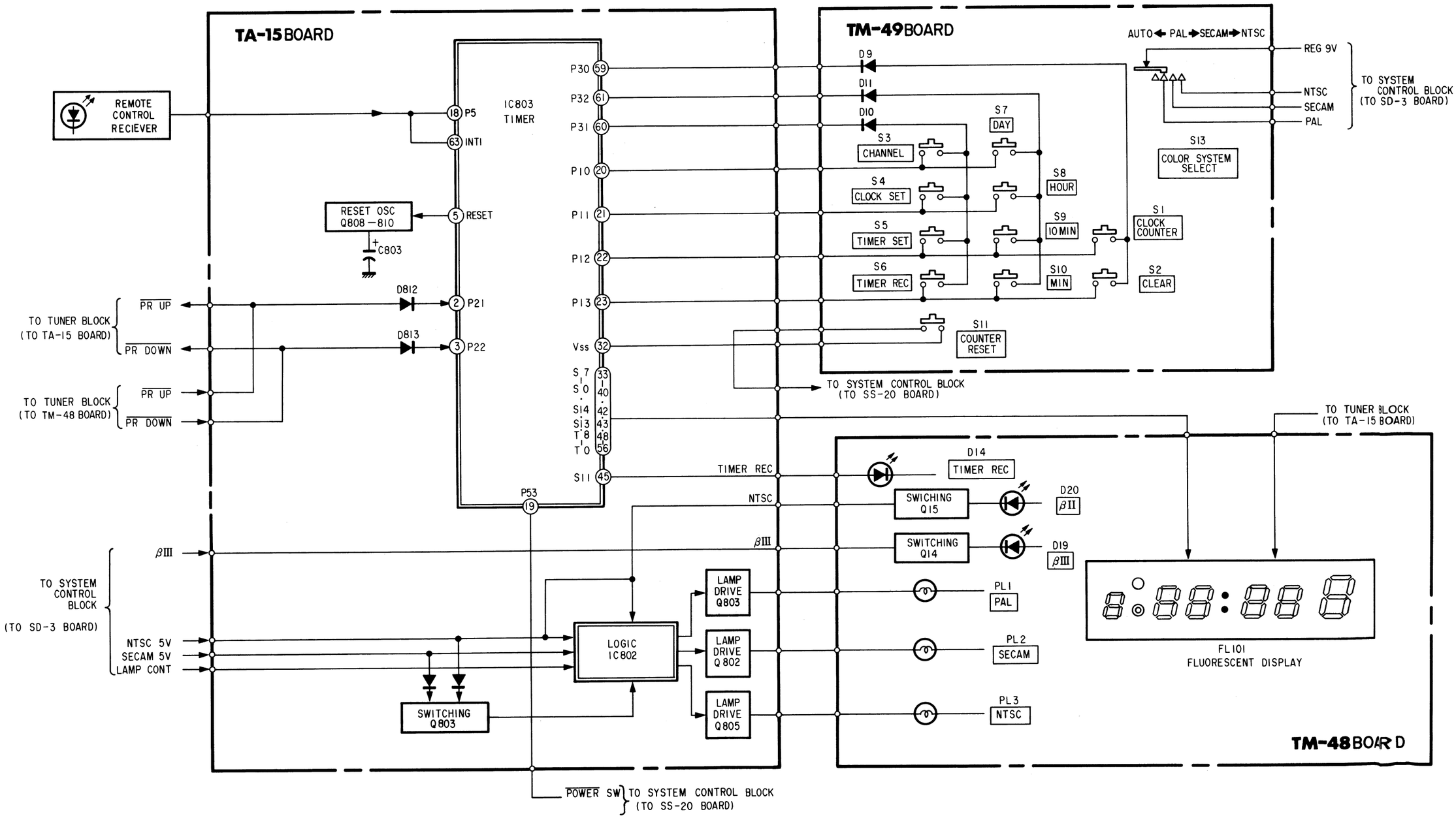

SR-15 POWER BLOCK DIAGRAM

Note: Model identification of POWER BLOCK is indicated by label on it.

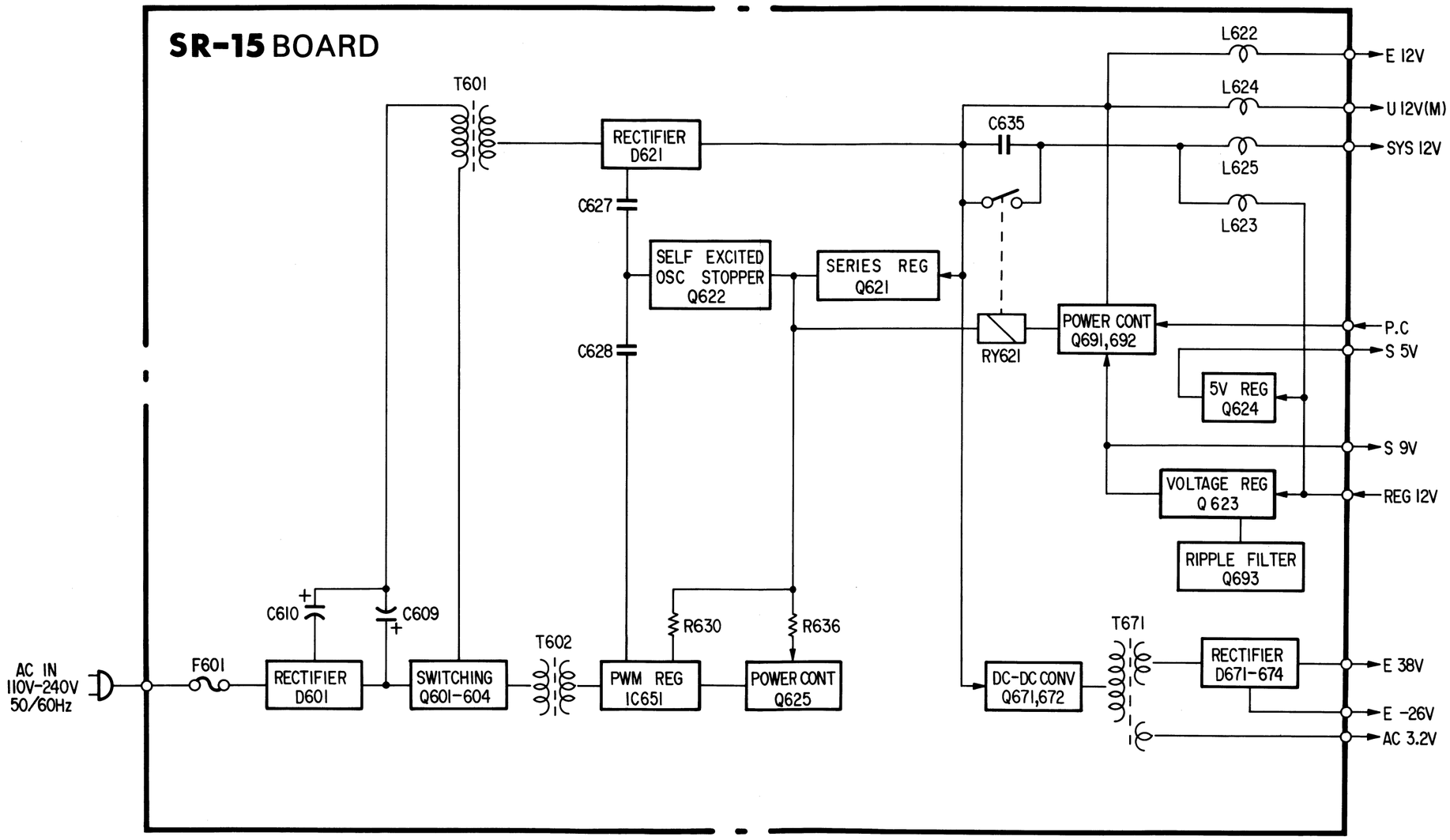

SR-15S POWER BLOCK DIAGRAM

Note: Model identification of POWER BLOCK is indicated by label on it.

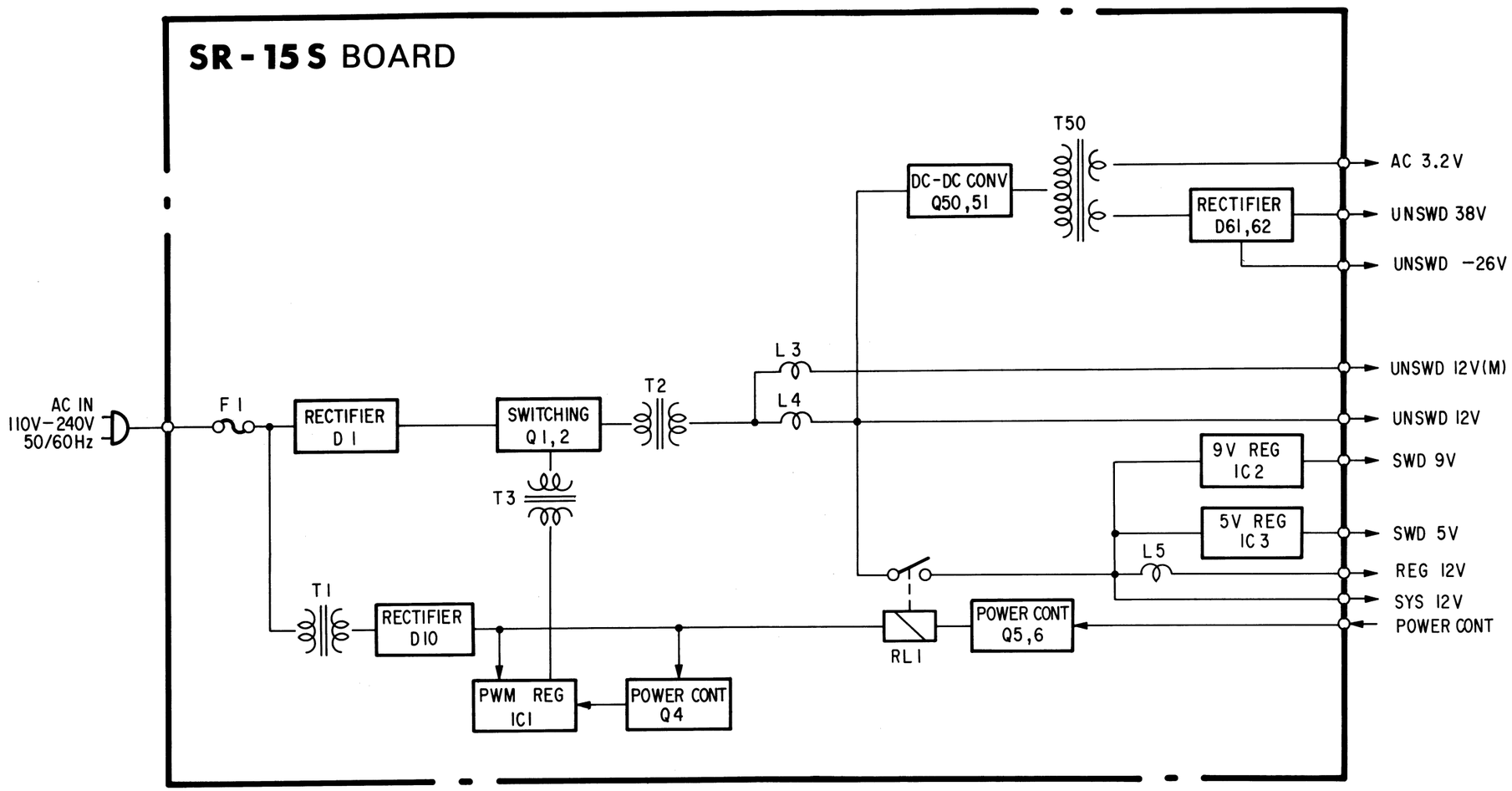

TUNER BLOCK DIAGRAM

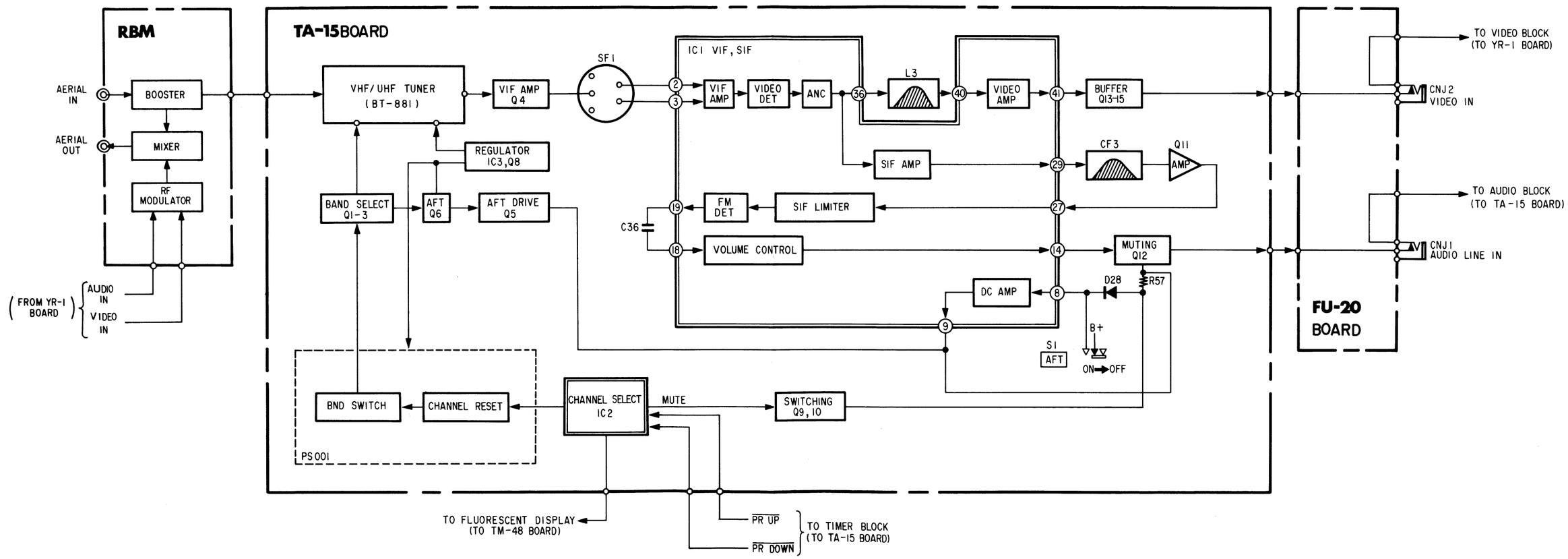

FRAME SCHEMATIC DIAGRAM

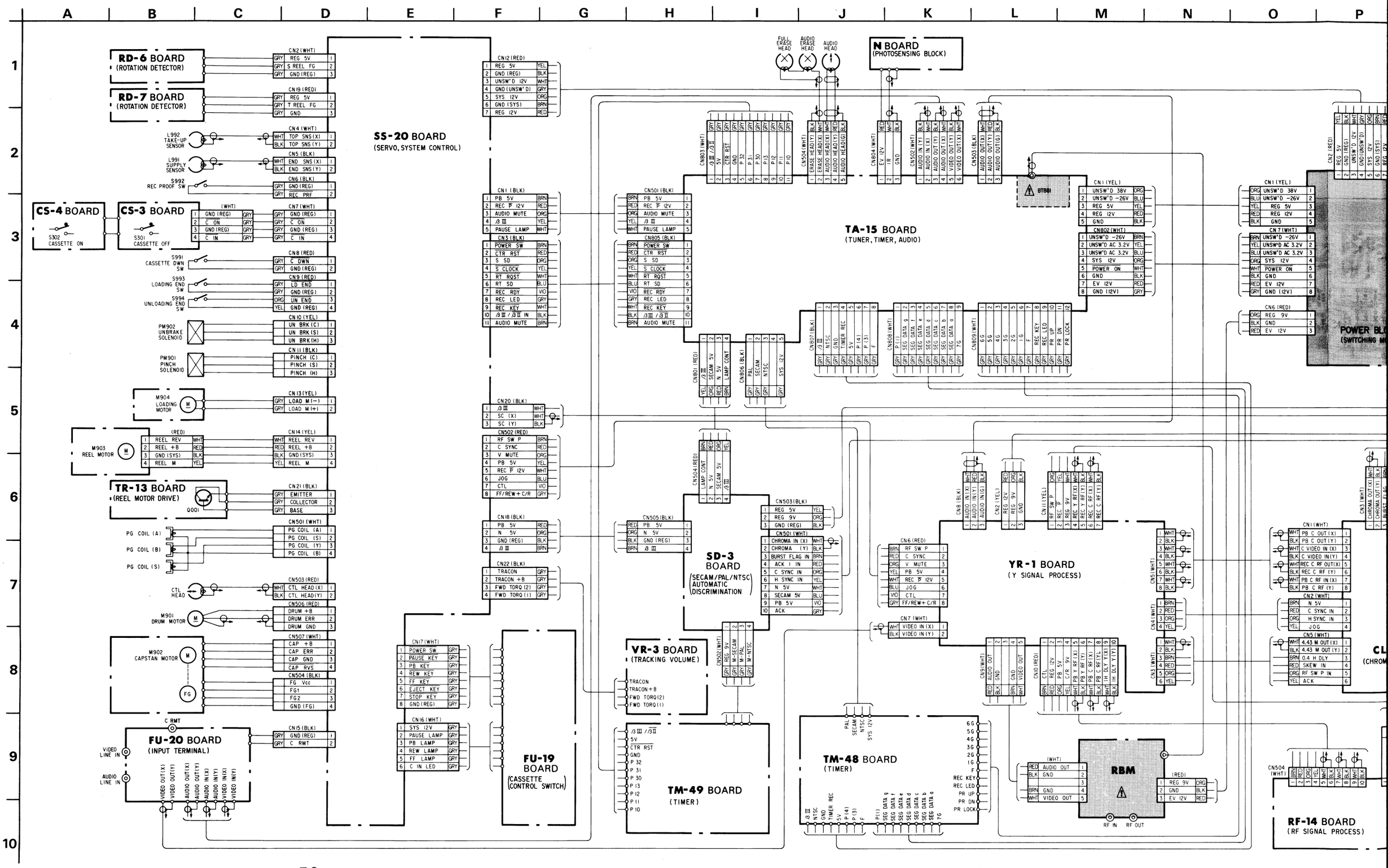

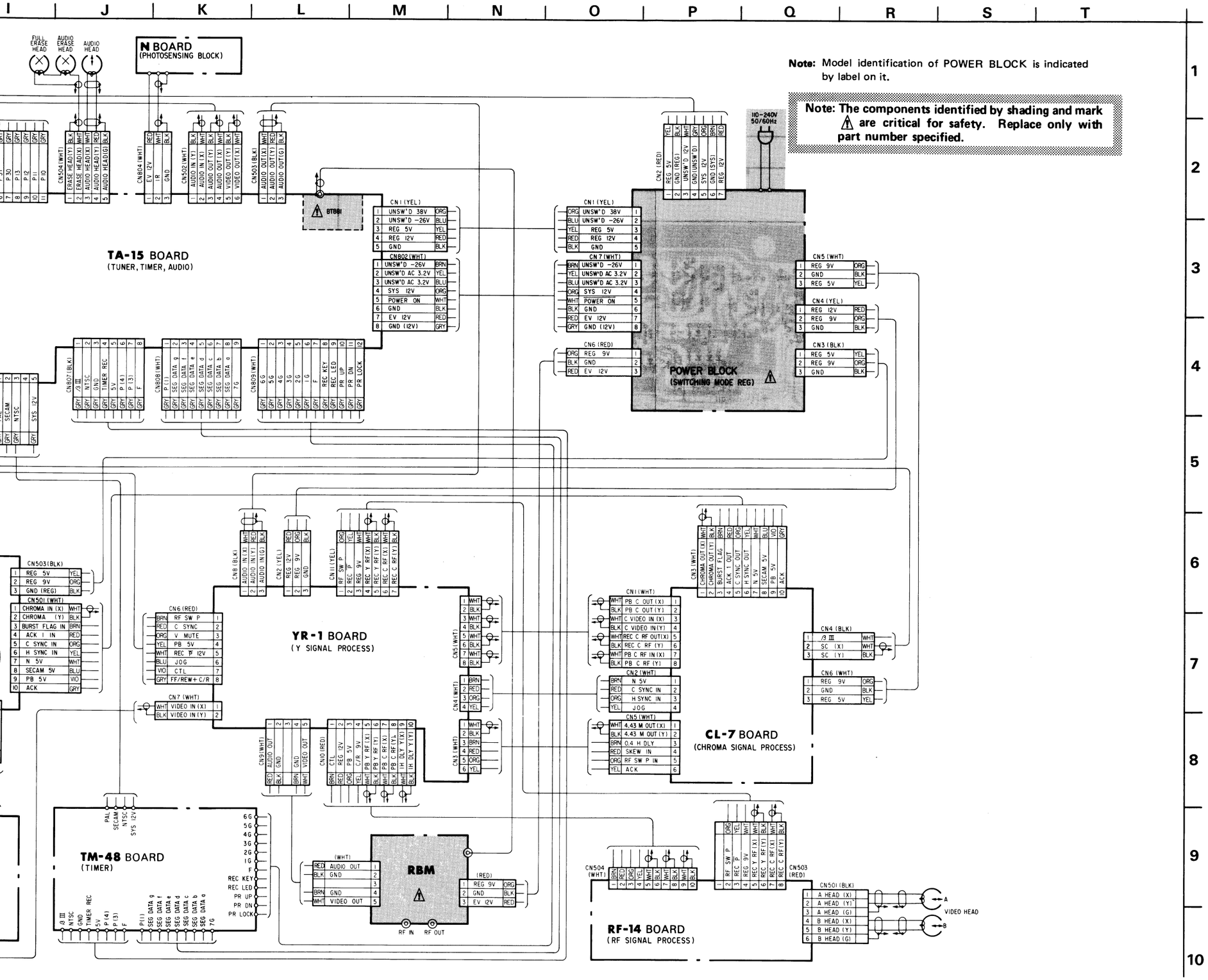

YR-1 BOARD (PAL)

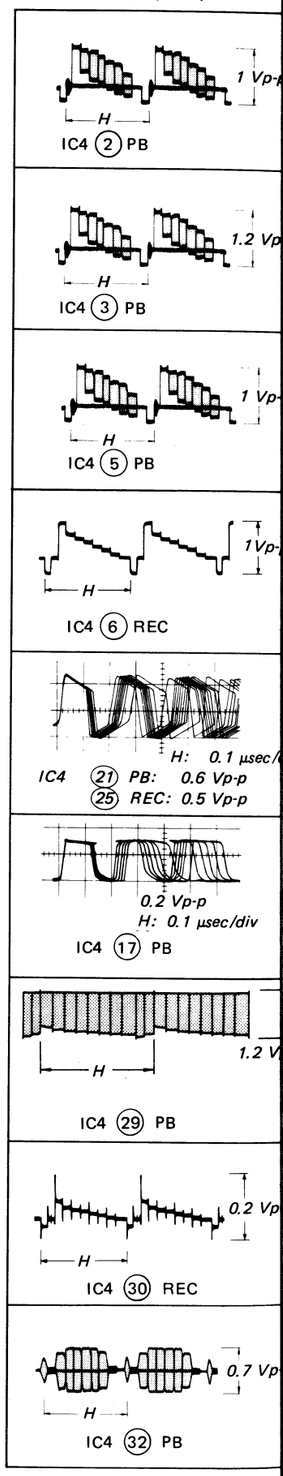

Q | R | S | T

Note: Model identification of POWER BLOCK is indicated by label on it.

Note: The components identified by shading and mark ⚠ are critical for safety. Replace only with part number specified.

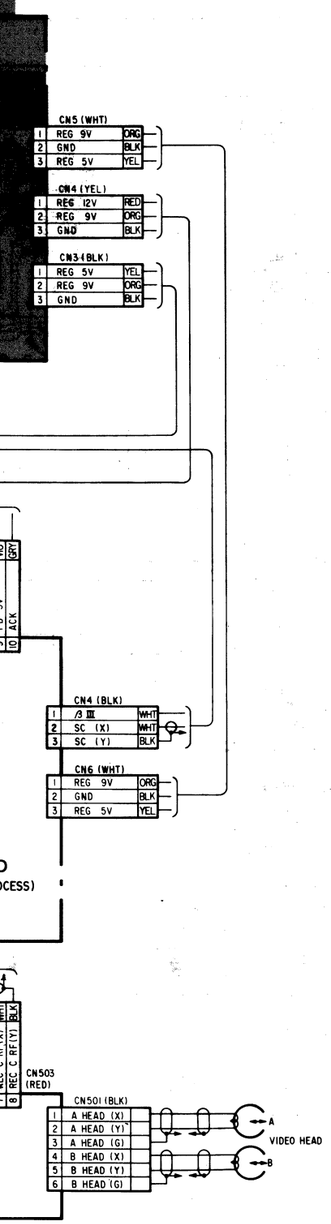

1 2 3 4 5 6 7 8 9 10

YR-1 BOARD (PAL)

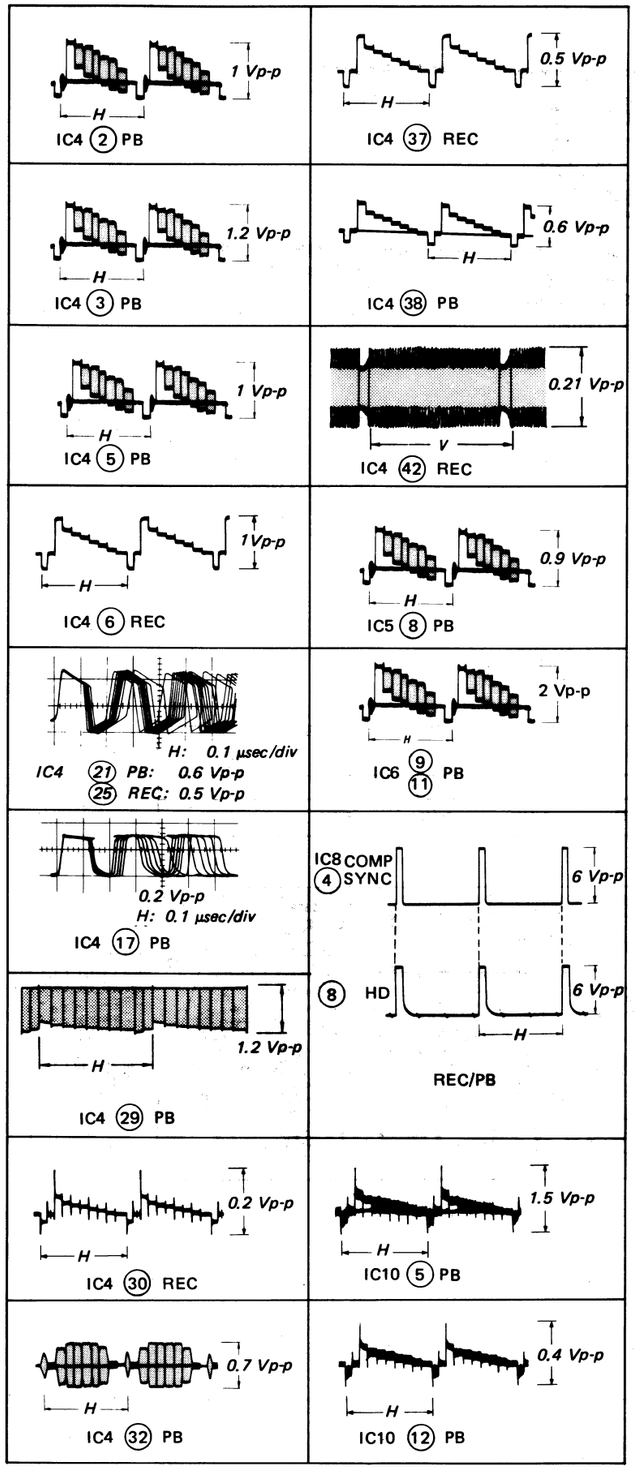

RF-14 [RF SIGNAL PROCESS] YR-1 [Y SIGNAL PROCESS]

– Ref. No. RF-14 BOARD: 1000 series, YR-1 BOARD: 1000 series –

Note:

- Color code of sleeving over the end of the jacket.

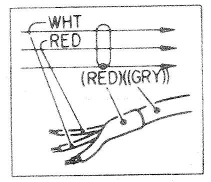

- ○— : indicates a lead wire mounted on the component side.
- ●— : indicates a lead wier mounted on the printed side.
- : Soldering side
- : B + pattern

DRUM
DSH – 39A – R

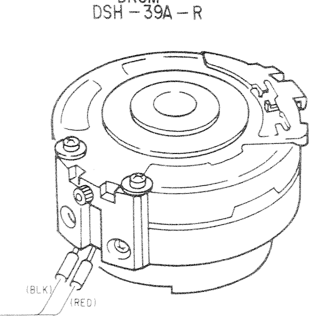

Q IC	508 503,502 501 IC501 IC502 507 IC503 509 505 506
D	501
ADJ	RV504 RV501 RV503 RV502 RV505

[RF-14 BOARD]

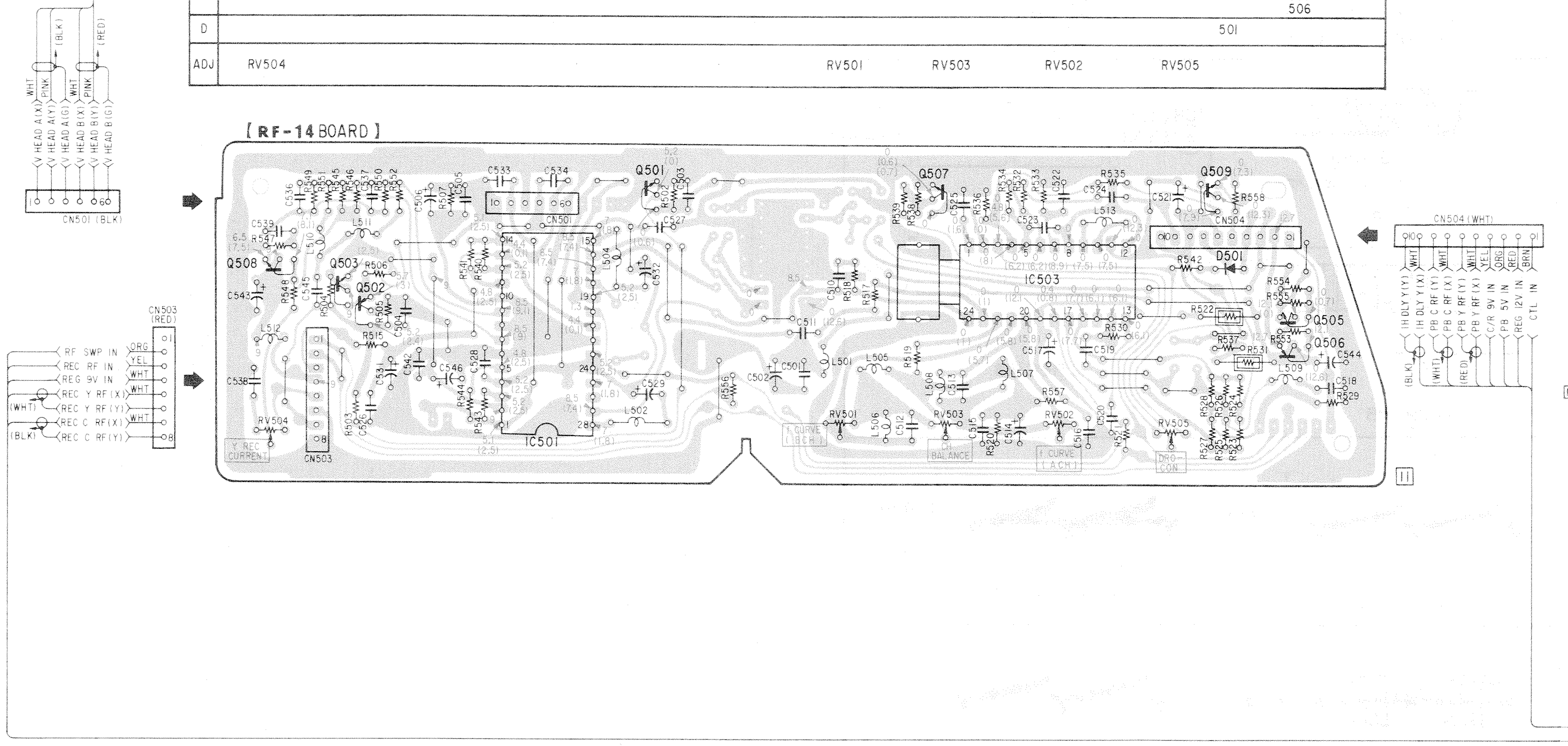

Q IC	1 IC1 IC5 33 32 IC3 31 30 IC6 20 59 IC10 4 3 IC8 22 57 60 19 IC2 58 56 18 54 62 55
D	1 2
ADJ	RV1 RV23 RV7 RV10 RV8 RV24

[YR-1 BOARD]

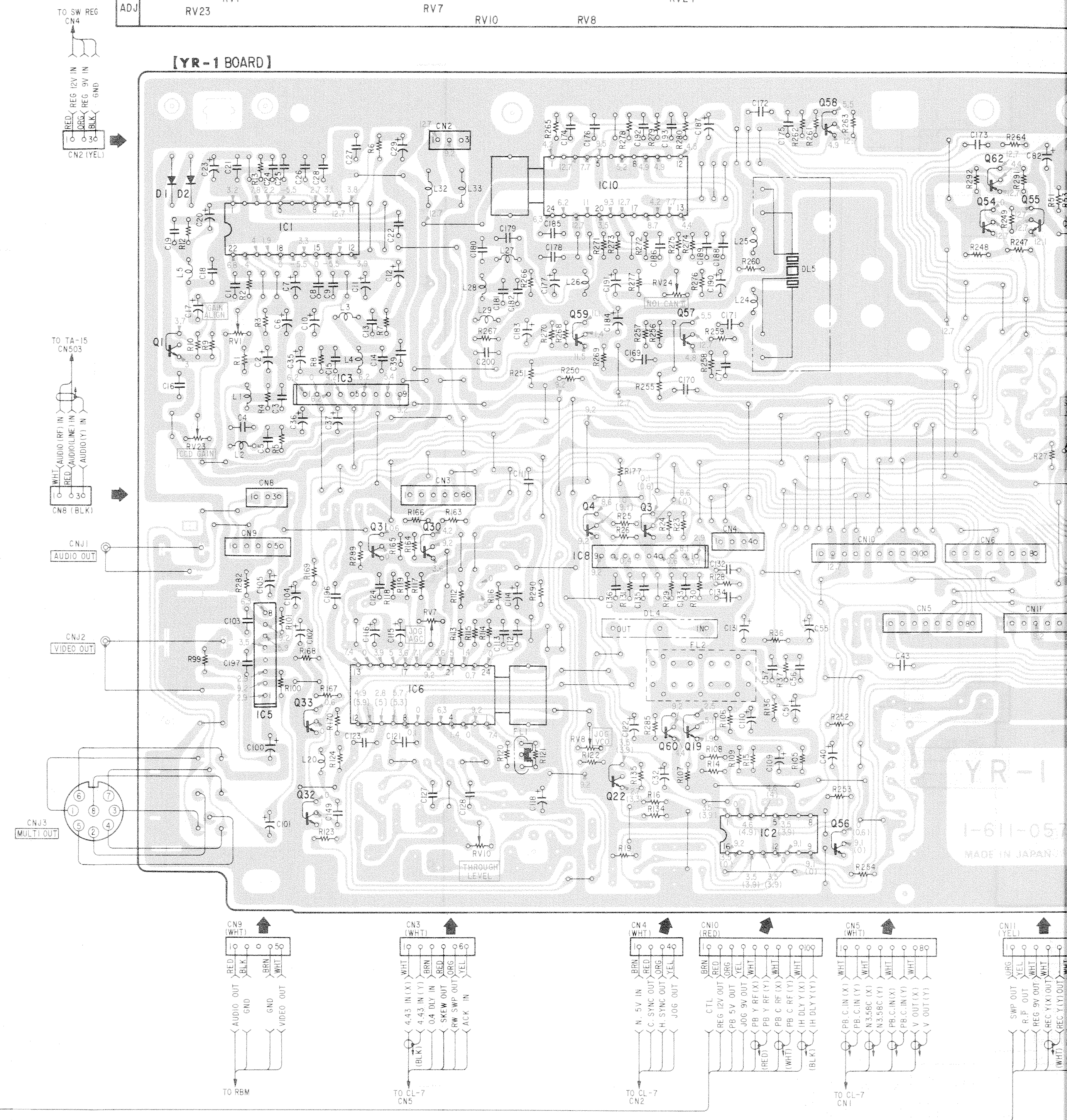

RF-14 [RF SIGNAL PROCESS]

– Ref. No. RF-14 BOARD: 1000 series –

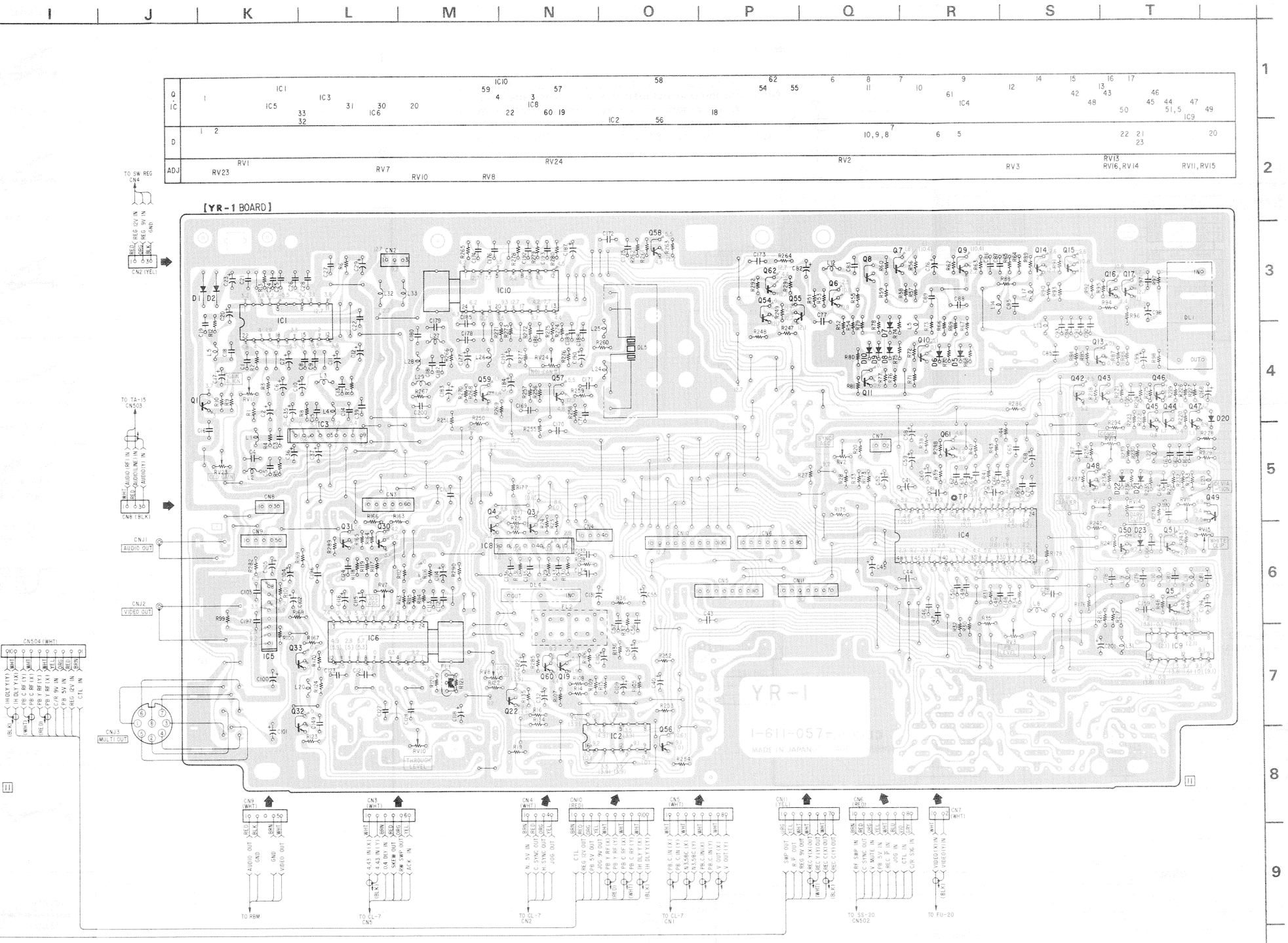

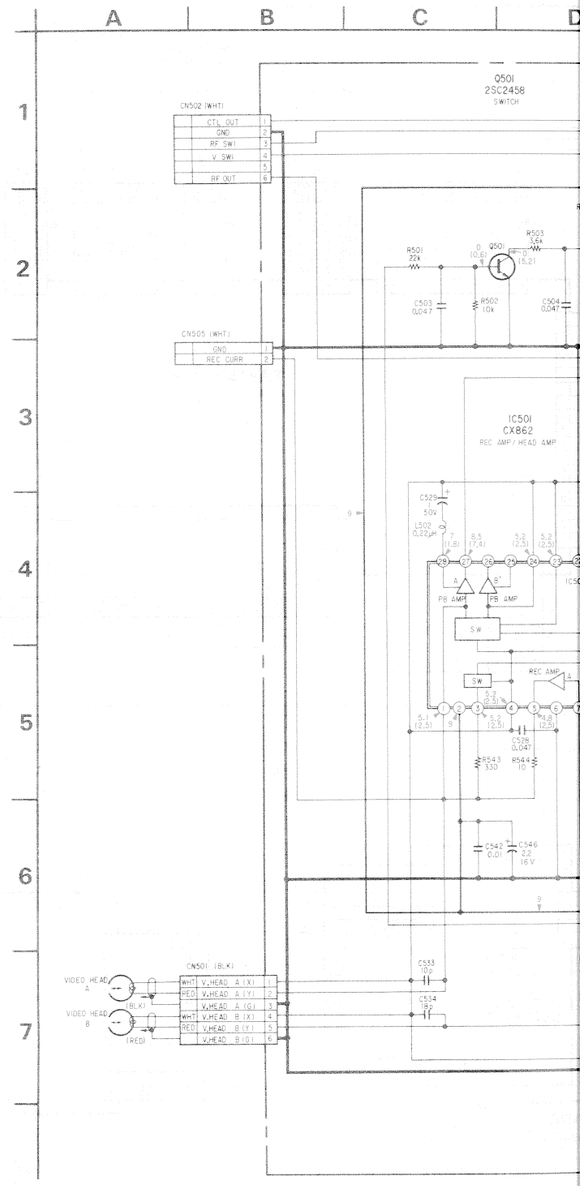

RF-14 BOARD (PAL)

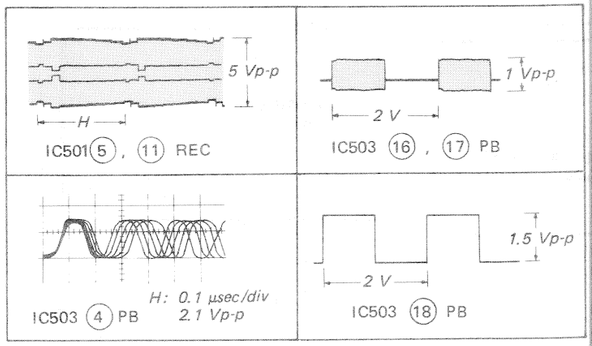

RF-14 [RF SIGNAL PROCESS]

– Ref. No. RF-14 BOARD: 1000 series –

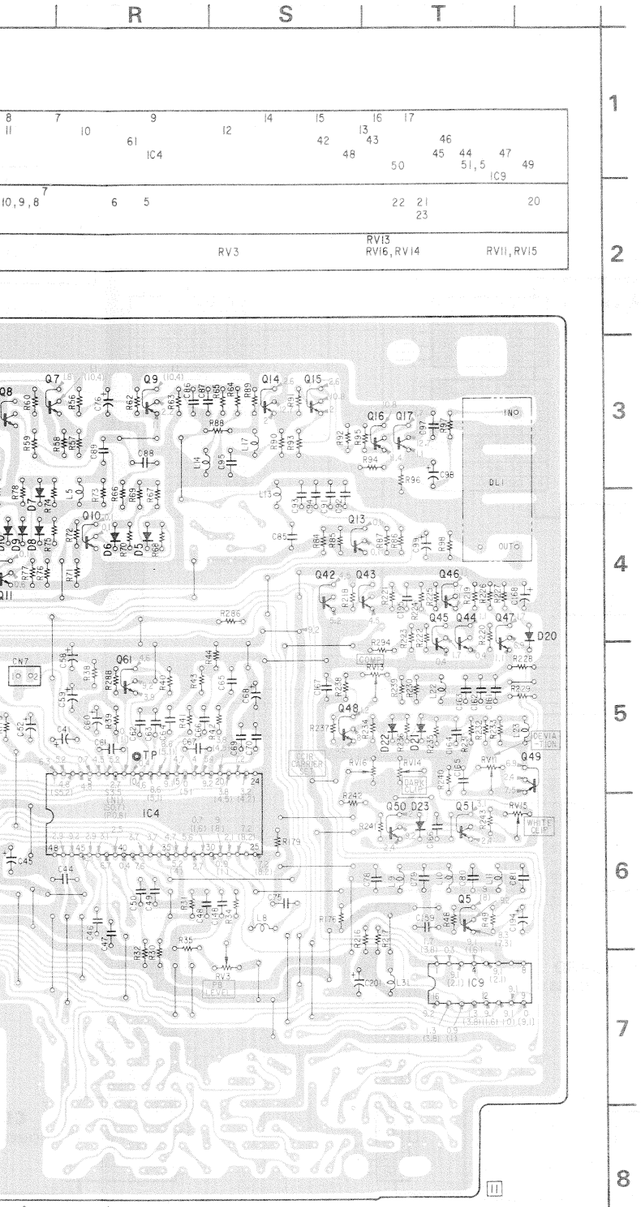

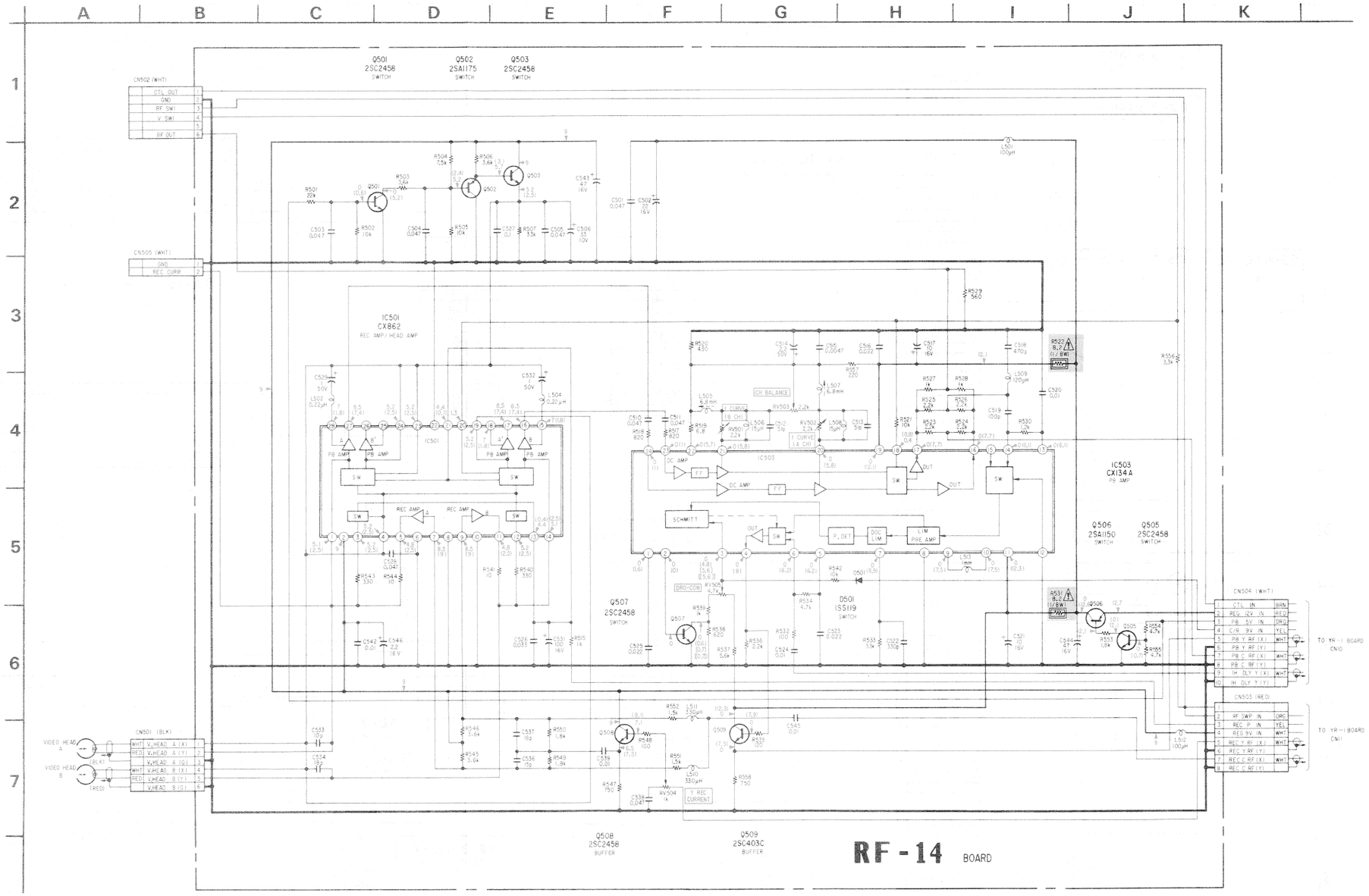

RF-14 BOARD (PAL)

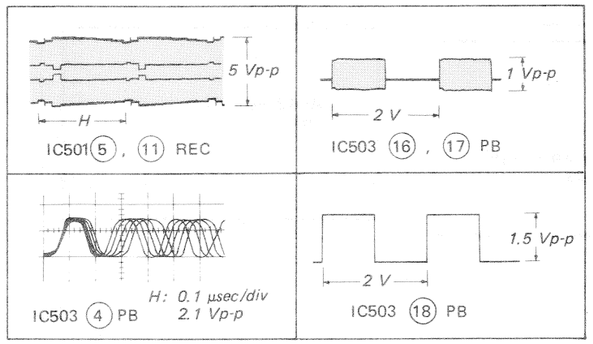

Note:

- All resistors are in ohms, 1/6 W unless otherwise noted.
- All capacitors are in μF (p:pF) unless otherwise noted. 50 V or less are not indicated except for electrolytic capacitors.
- All variable and semi-fixed resistors have characteristic curve B, unless otherwise noted.
- : Nonflamable resistor
- : Fusible resistor
- : B + bus.
- The voltage value is a reference value between the grounding when the color bar signal is received from a color bar generator.

The voltage value is measured using a digital tester (10 MΩ/V).

Note: The components identified by shading and mark ⚠ are critical for safety. Replace only with part number specified.

When indicating parts by reference number, please include the board name.

YR-1 [Y SIGNAL PROCESS]

– YR-1 BOARD: 1000 series –

Note:

- All resistors are in ohms, 1/6 W unless otherwise noted.
- All capacitors are in μF (p:pF) unless otherwise noted. 50 V or less are not indicated except for electrolytic capacitors.
- All variable and semi-fixed resistors have characteristic curve B, unless otherwise noted.
- : Nonflamable resistor
- : Fusible resistor
- : B + bus.
- The voltage value is a reference value between the grounding when the color bar signal is received from a color bar generator.

The voltage value is measured using a digital tester (10 MΩ/V).

When indicating parts by reference number, please include the board name.

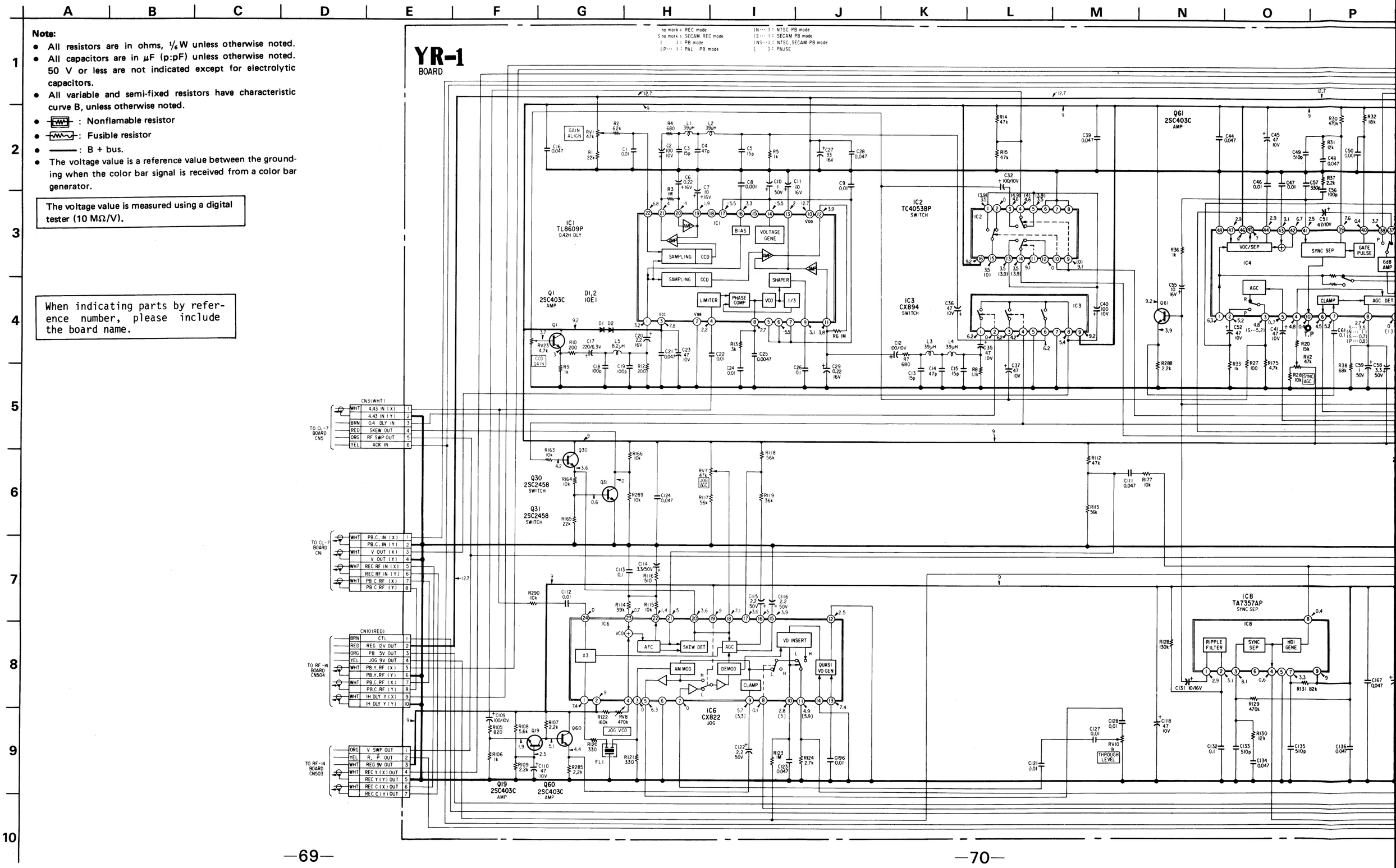

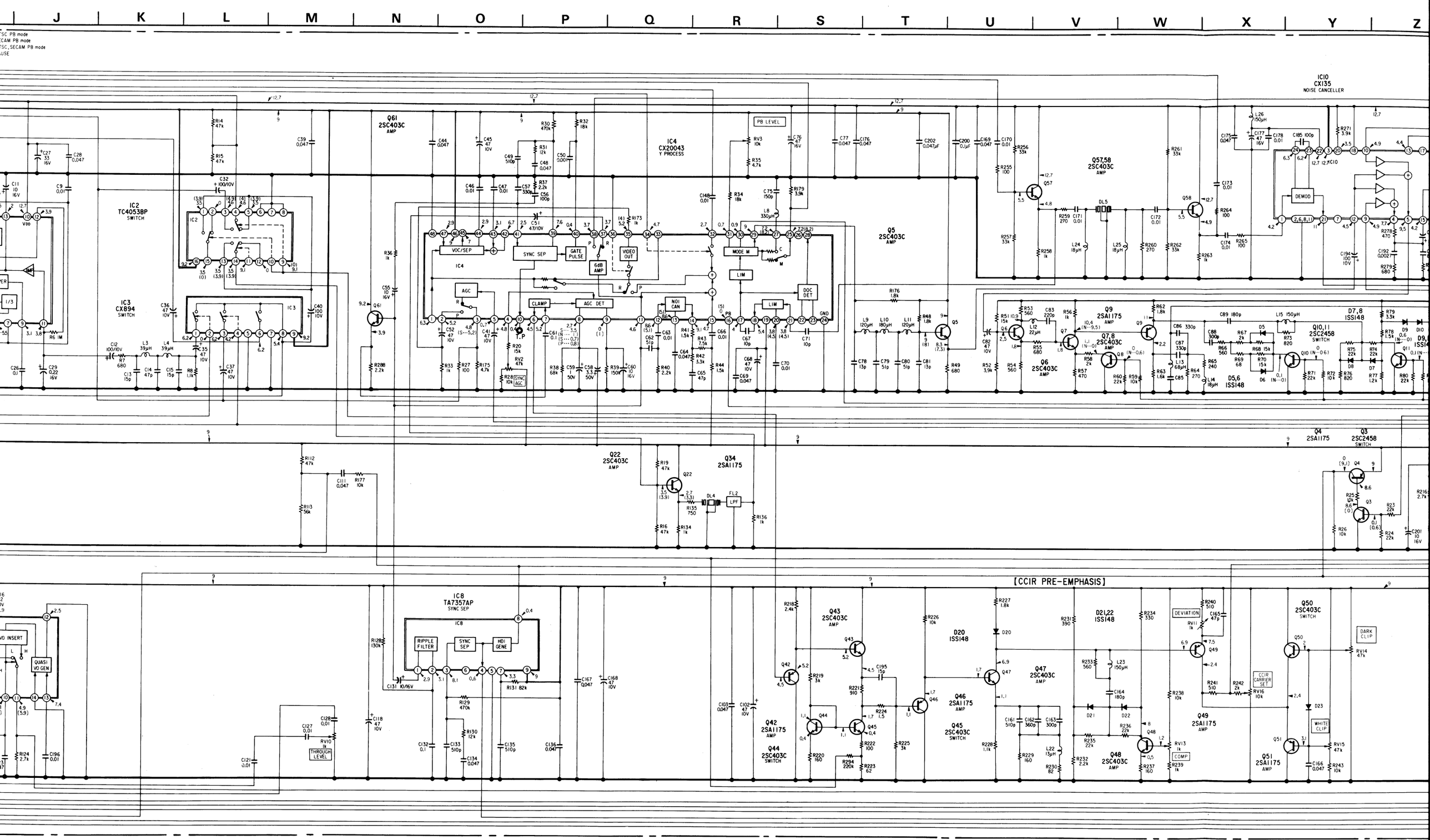
J K L M N O P Q R S T U V W X Y Z
IC2 TC4053BP SWITCH
IC3 CX894 SWITCH
IC4 CX20043 Y PROCESS
IC10 CX135 NOISE CANCELLER
IC8 TA7357AP SYNC SEP
Q61 2SC403C AMP
Q57,58 2SC403C AMP
Q5 2SC403C AMP
Q6 2SC403C AMP
Q9 2SA1175 AMP
Q7,8 2SC403C AMP
Q10,11 2SC2458 SWITCH
D7,8 1SS148
D5,6 1SS148
Q22 2SC403C AMP
Q34 2SA1175
Q4 2SA1175
Q3 2SC2458 SWITCH
[CCIR PRE-EMPHASIS]
Q43 2SC403C AMP
Q42 2SA1175 AMP
Q44 2SC403C SWITCH
D20 1SS148
Q46 2SA1175 AMP
Q45 2SC403C SWITCH
Q47 2SC403C AMP
D21,22 1SS148
Q48 2SC403C AMP
Q49 2SA1175 AMP
Q50 2SC403C SWITCH
Q51 2SA1175 AMP
PB LEVEL
VOC/SEP
SYNC SEP
GATE PULSE
64dB AMP
VIDEO OUT
MODE M
LIM
AGC
CLAMP
AGC DET
NOI CAN
DOC DET
DEMOD
DEVIATION
CCIR CARRIER SET
DARK CLIP
WHITE CLIP
COMP
THROUGH LEVEL
QUASI VO GEN
RIPPLE FILTER
HDI GENE
LPF

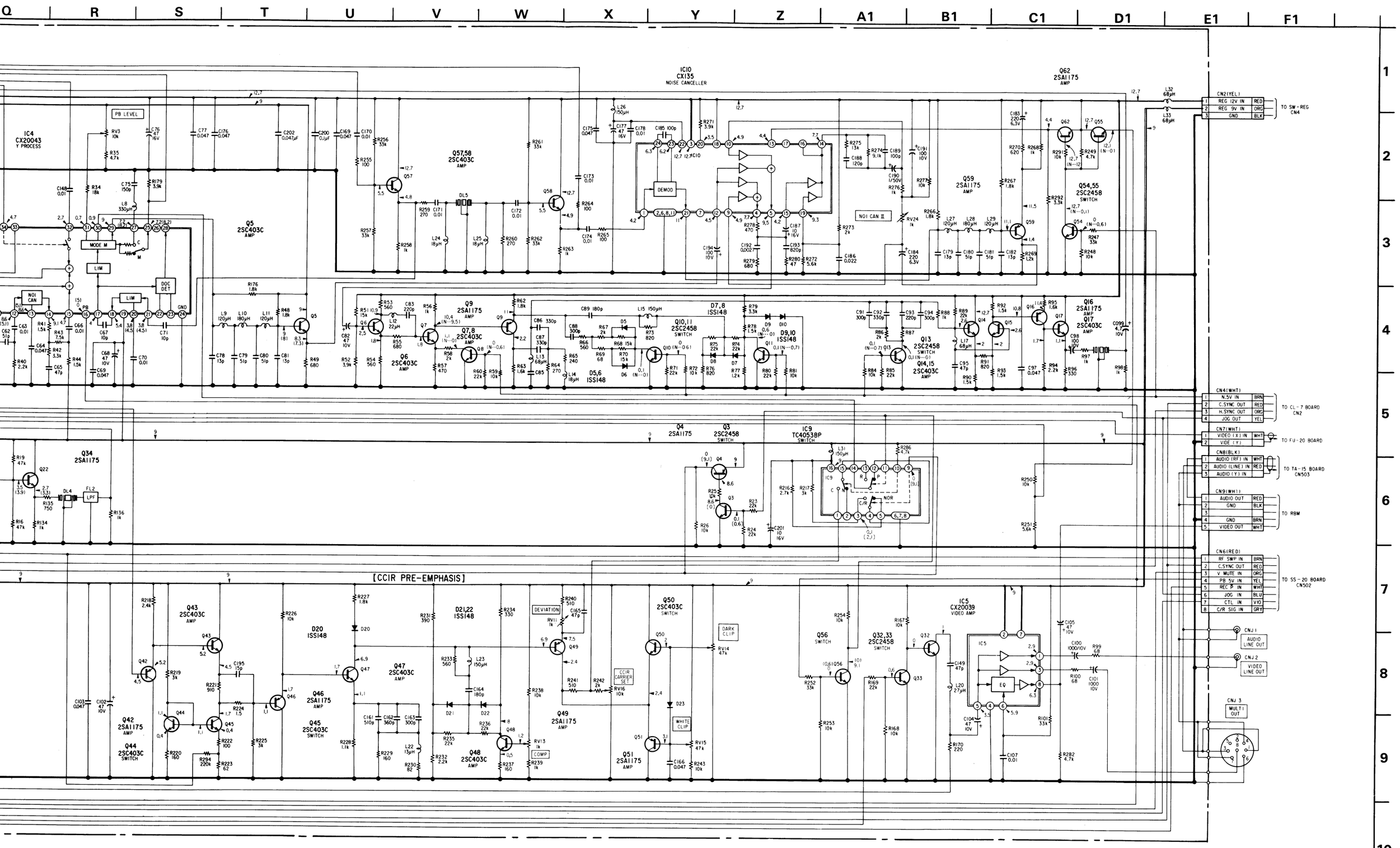
Q R S T U V W X Y Z A1 B1 C1 D1 E1 F1
1 2 3 4 5 6 7 8 9 10
IC4 CX20043 Y PROCESS
IC10 CX135 NOISE CANCELLER
Q62 2SA1175 AMP
Q59 2SA1175 AMP
Q54,55 2SC2458 SWITCH
Q57,58 2SC403C AMP
Q5 2SC403C AMP
Q9 2SA1175 AMP
Q7,8 2SC403C AMP
Q6 2SC403C AMP
Q10,11 2SC2458 SWITCH
Q16 2SA1175 AMP
Q17 2SC403C AMP
Q13 2SC2458 SWITCH
Q14,15 2SC403C AMP
D7,8 1SS148
D9,10 1SS148
D5,6 1SS148
Q34 2SA1175
Q22
Q4 2SA1175
Q3 2SC2458 SWITCH
IC9 TC4053BP SWITCH
[CCIR PRE-EMPHASIS]
Q43 2SC403C AMP
Q42 2SA1175 AMP
Q44 2SC403C SWITCH
Q45 2SC403C SWITCH
Q46 2SA1175 AMP
Q47 2SC403C AMP
D20 1SS148
D21,22 1SS148
Q48 2SC403C AMP
Q49 2SA1175 AMP
Q50 2SC403C SWITCH
Q51 2SA1175 AMP
Q56 SWITCH
Q32,33 2SC2458 SWITCH
IC5 CX20039 VIDEO AMP
DEVIATION
DARK CLIP
CCIR CARRIER SET
WHITE CLIP
COMP
NOI CAN II
PB LEVEL
MODE M
LIM
DOC DET
NOI CAN
DEMOD
LPF
CN2(YEL)
1 REG 12V IN RED
2 REG 9V IN ORG
3 GND BLK
TO SW-REG CN4
CN4(WHT)
1 N.5V IN BRN
2 C.SYNC OUT RED
3 H.SYNC OUT ORG
4 JOG OUT YEL
TO CL-7 BOARD CN2
CN7(WHT)
1 VIDEO (X) IN WHT
2 VIDE (Y)
TO FU-20 BOARD
CN8(BLK)
1 AUDIO (RF) IN WHT
2 AUDIO (LINE) IN RED
3 AUDIO (Y) IN
TO TA-15 BOARD CN503
CN9(WHT)
1 AUDIO OUT RED
2 GND BLK
3
4 GND BRN
5 VIDEO OUT WHT
TO RBM
CN6(RED)
1 RF SWP IN BRN
2 C.SYNC OUT RED
3 V MUTE IN ORG
4 PB 5V IN YEL
5 REC 5V IN WHT
6 JOG IN BLU
7 CTL IN VIO
8 C/R SIG IN GRY
TO SS-20 BOARD CN502
CNJ 1 AUDIO LINE OUT
CNJ 2 VIDEO LINE OUT
CNJ 3 MULTI OUT

CL-7 [CHROMA SIGNAL PROCESS] SD-3 [SECAM/PAL/NTSC AUTOMATIC DISCRIMINATION]

— Ref. No. CL-7 BOARD: 3000 series, SD-3 BOARD: 4500 series —

IC Q	IC506	IC505	IC507	IC508	IC504	502 501	506 IC501	503	504	IC Q
D	502,503,504					501				D
ADJ TP	LV501	RV501 501 502								ADJ TP

【SD-3 BOARD】

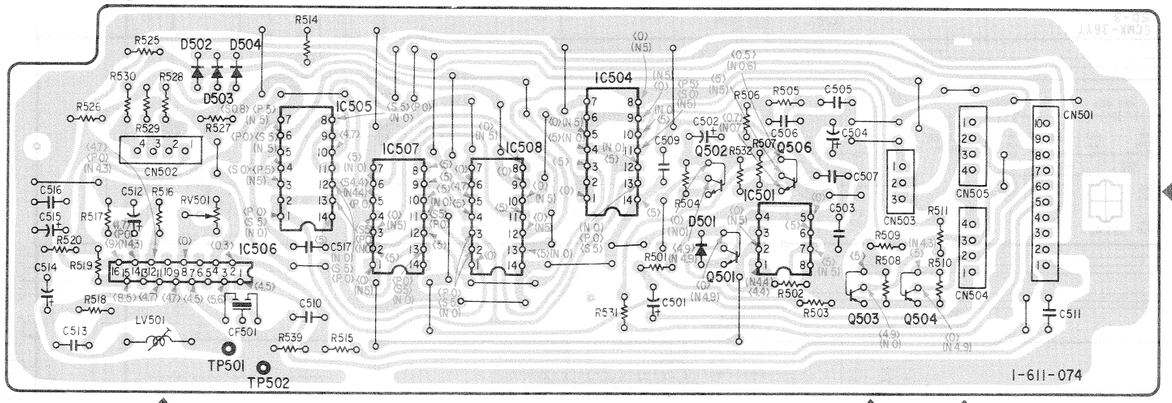

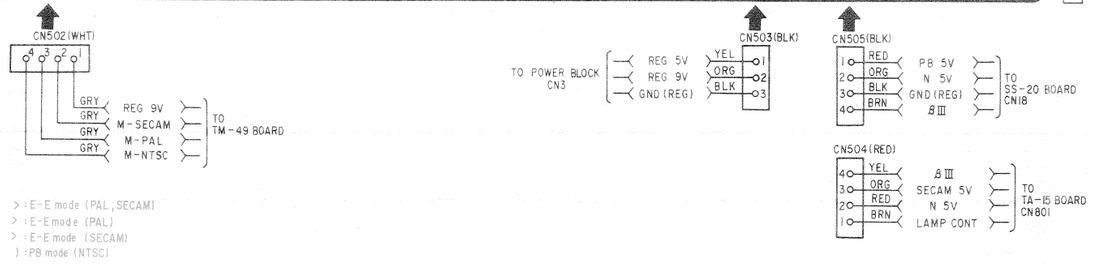

< > : E-E mode (PAL, SECAM)
<P > : E-E mode (PAL)
<S > : E-E mode (SECAM)
(N) : PB mode (NTSC)

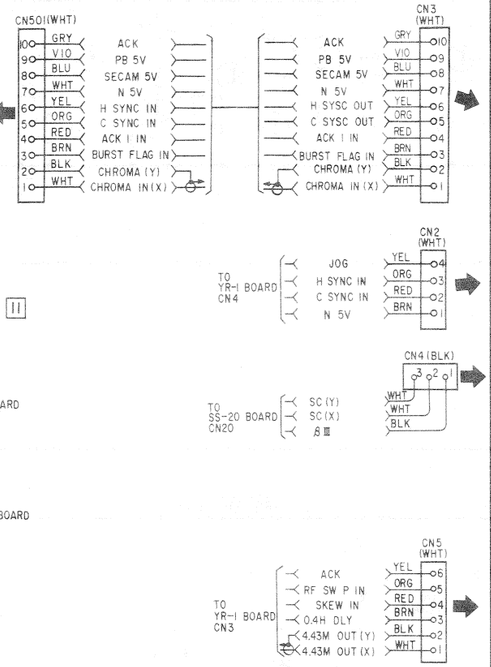

no mark : REC mode
S no mark : REC mode (SECAM)
( ) : PB mode
(S) : PB mode (SECAM)
(N) : PB mode (NTSC)
(P) : PB mode (PAL)
(NP) : PB mode (NTSC, PAL)

【CL-7 BOARD】

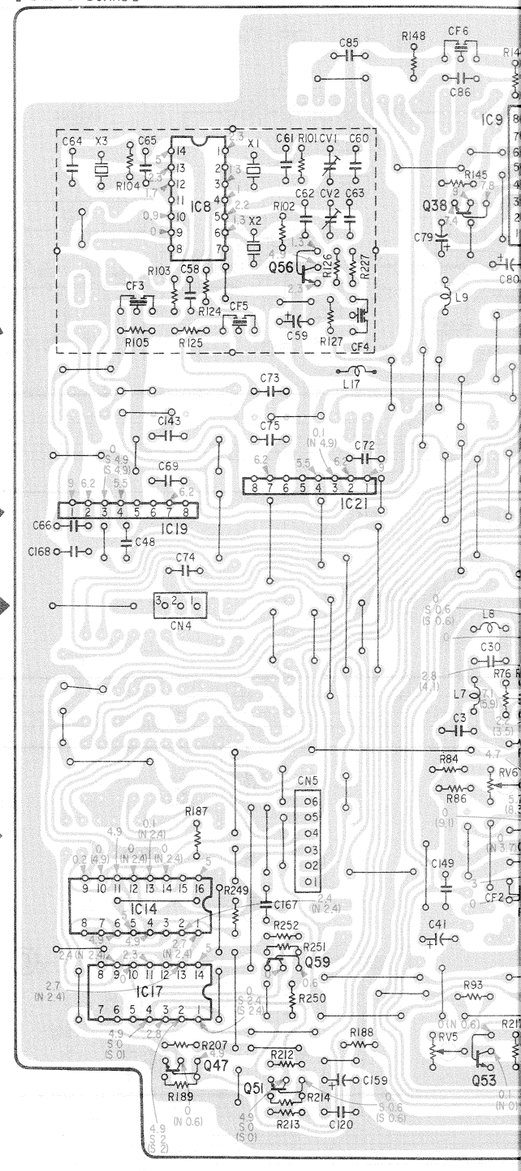

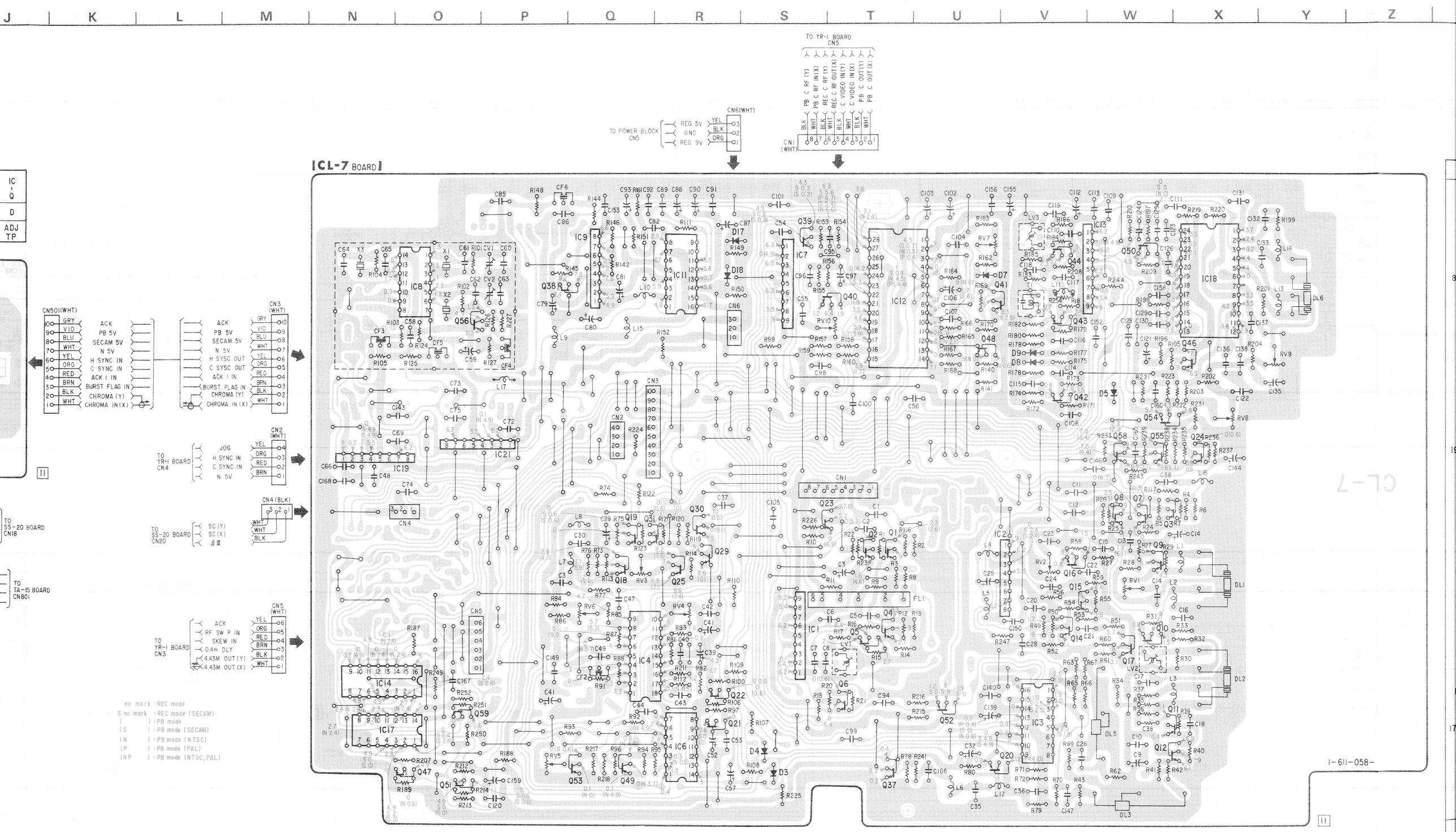
J K L M N O P Q R S T U V W X Y Z
IC
Q
D
ADJ TP
CN501(WHT)
GRY ACK
VIO PB 5V
BLU SECAM 5V
WHT N 5V
YEL H SYNC IN
ORG C SYNC IN
RED ACK I IN
BRN BURST FLAG IN
BLK CHROMA (Y)
WHT CHROMA IN (X)
CN3 (WHT)
ACK
PB 5V
SECAM 5V
N 5V
H SYSC OUT
C SYSC OUT
ACK I IN
BURST FLAG IN
CHROMA (Y)
CHROMA IN (X)
TO YR-1 BOARD CN4
JOG
H SYNC IN
C SYNC IN
N 5V
CN2 (WHT)
YEL
ORG
RED
BRN
TO SS-20 BOARD CN18
TO SS-20 BOARD CN20
SC (Y)
SC (X)
CN4 (BLK)
WHT
WHT
BLK
TO TA-15 BOARD CN801
TO YR-1 BOARD CN3
ACK
RF SW P IN
SKEW IN
0.4H DLY
4.43M OUT (Y)
4.43M OUT (X)
CN5 (WHT)
YEL
ORG
RED
BRN
BLK
WHT
TO POWER BLOCK CN5
REG 5V
GND
REG 9V
CN6(WHT)
YEL
BLK
ORG
TO YR-1 BOARD CN5
PB C RF (Y)
PB C RF IN (X)
REC C RF (Y)
REC C RF OUT (X)
C VIDEO IN (Y)
C VIDEO IN (X)
PB C OUT (Y)
PB C OUT (X)
CN1 (WHT)
[CL-7 BOARD]
no mark : REC mode
S no mark : REC mode (SECAM)
( ) : PB mode
(S) : PB mode (SECAM)
(N) : PB mode (NTSC)
(P) : PB mode (PAL)
(NP) : PB mode (NTSC, PAL)
1-611-058-

IC	Q	D	ADJ, TP
	39		LV3
		17	RV7
	44,50		CV2
8 9,11,7,13 12 18	38	18 7	CV2
	40,41		
	56 43		
			RV10
	48 46	9 8	RV9
	42	5	
	54		RV8
21 19	55 58,24		
	8,7 3 30 23		
	19,31		
	2,1 29 18,25 16 9		RV2
2			RV1
	15		RV6, RV4
1 4	4,14 5 10 17		
			LV1, LV2
14	22 6,52		
	59 21		
17 6 3	11		
	12 20	4	
	47 53,49 51 37	3	RV5
IC	Q	D	ADJ, TP

Note:

- Color code of sleeving over the end of the jacket.

- ○— : parts extracted from the component side.
- ●— : parts extracted from the conductor side.
- : B+ pattern

CL-7 [CHROMA SIGNAL PROCESS]

CHROMA CHROMA

SD-3 [SECAM/PAL/NTSC AUTOMATIC DISCRIMINATION]

– Ref. No. CL-7 BOARD: 3000 series, SD-3 BOARD: 4500 series –

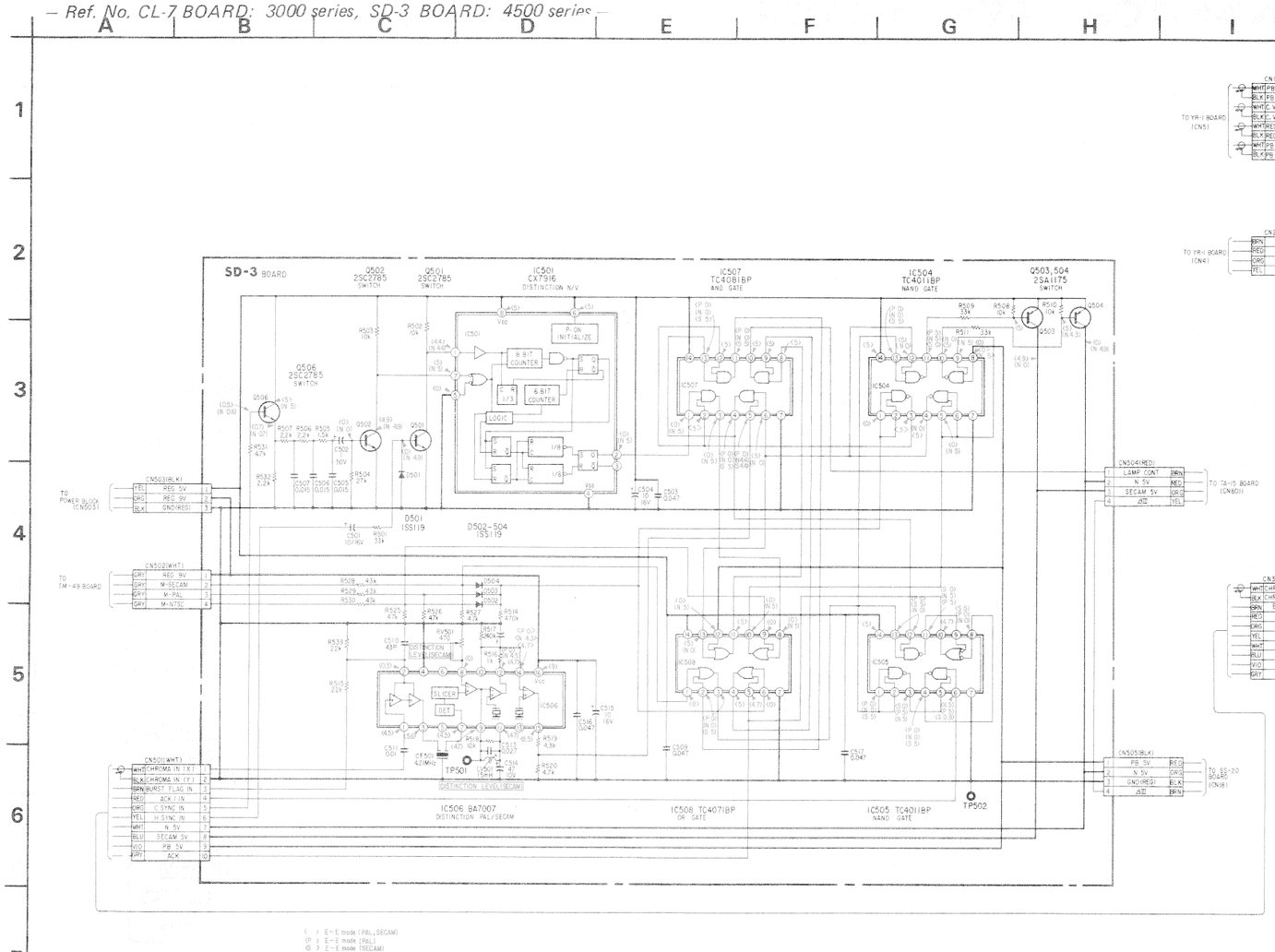

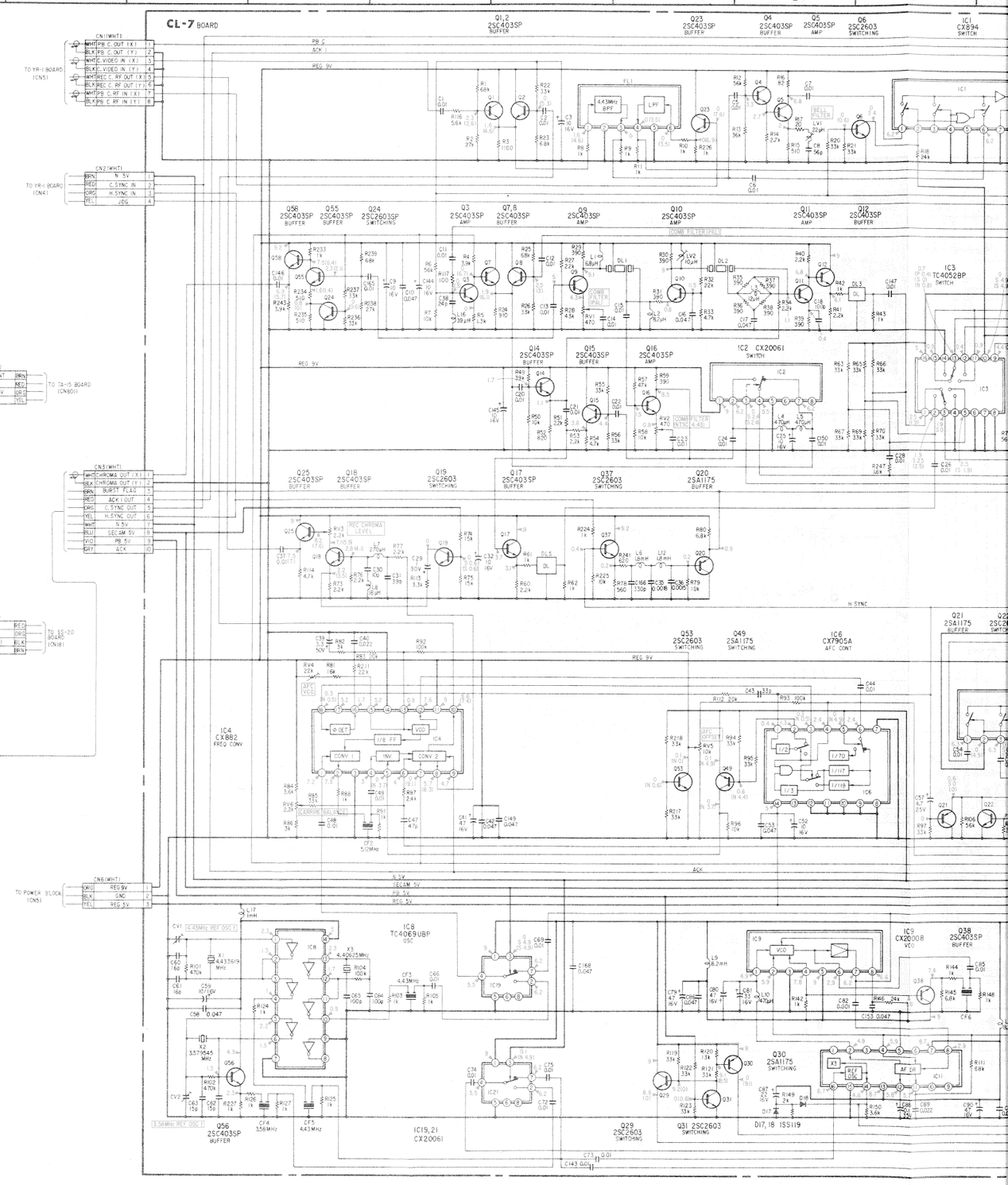

Note:

- All resistors are in ohms, 1/6 W unless otherwise noted.
- All capacitors are in μF (p:pF) unless otherwise noted. 50 V or less are not indicated except for electrolytic capacitors.
- All variable and semi-fixed resistors have characteristic curve B, unless otherwise noted.
- : Nonflamable resistor
- : Fusible resistor
- : B + bus.
- The voltage value is a reference value between the grounding when the color bar signal is received from a color bar generator.

The voltage value is measured using a digital tester (10 MΩ/V).

When indicating parts by reference number, please include the board name.

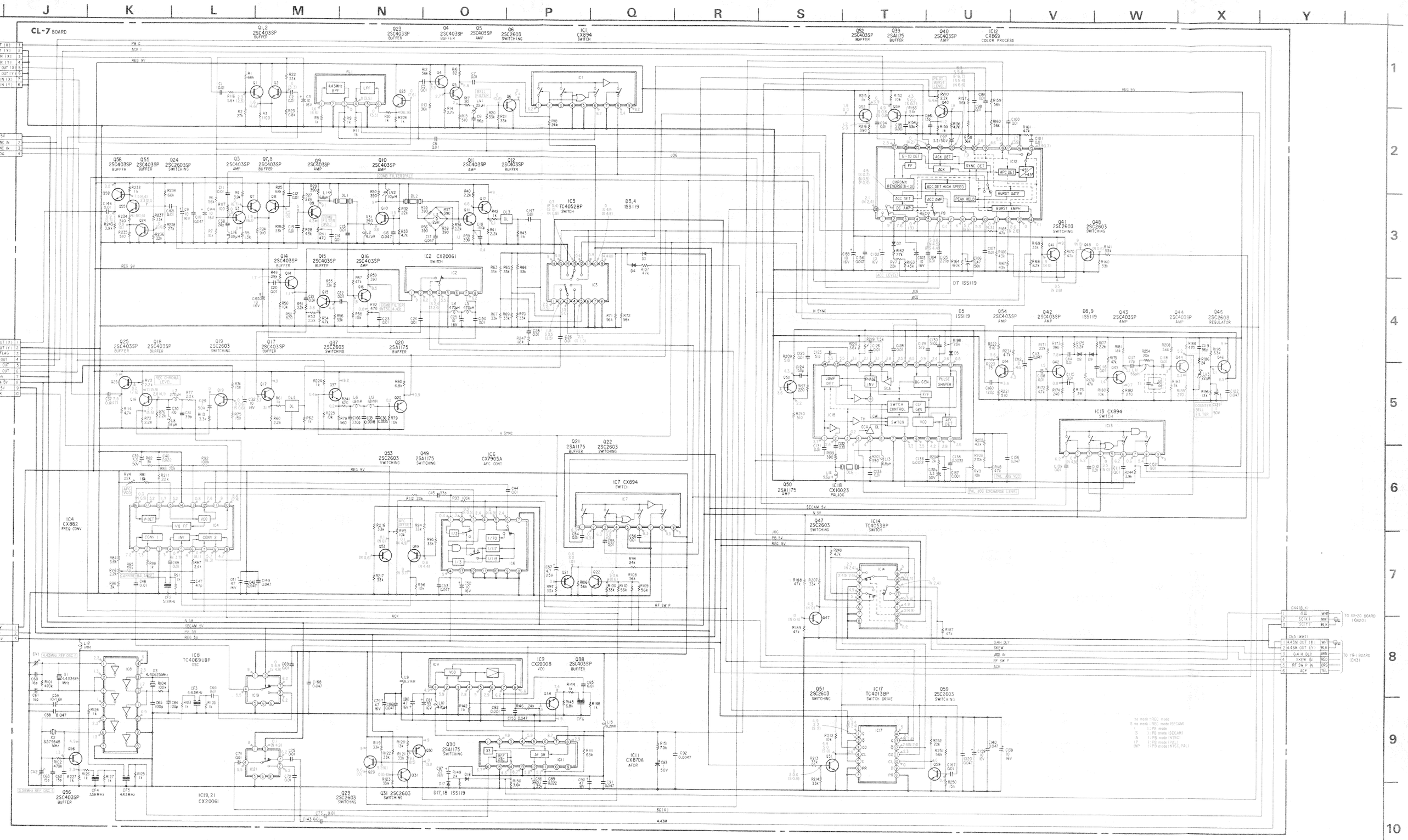
CL-7 BOARD
IC1 CX894 SWITCH
IC2 CX20061 SWITCH
IC3 TC4052BP SWITCH
IC4 CX882 FREQ CONV
IC6 CX7905A AFC CONT
IC7 CX894 SWITCH
IC8 TC4069UBP OSC
IC9 CX20008 VCO
IC11 CX870A AFDR
IC12 CX869 COLOR PROCESS
IC13 CX894 SWITCH
IC14 TC4053BP SWITCH
IC17 TC4013BP SWITCH DRIVE
IC18 CX10023 PALJOG
IC19,21 CX20061
TO SS-20 BOARD (CN20)
TO YR-1 BOARD (CN3)

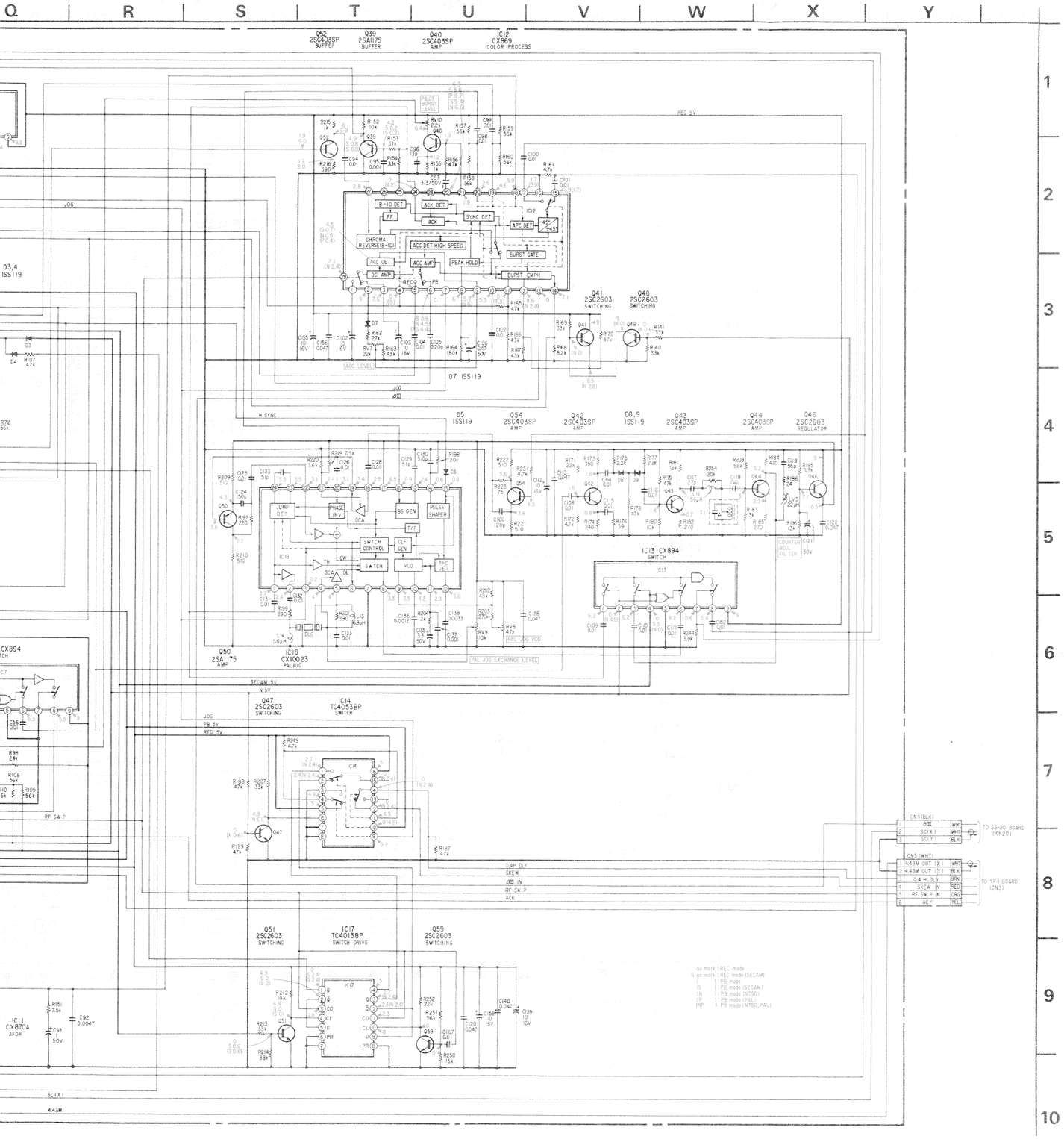

CL-7 BOARD (PAL)

1	FL (1) REC (1 Vp-p, H)	IC6 (1) PB (H, 5 Vp-p)	IC13 (3) (PB) (0.4 Vp-p, H)
2	IC1 (1) REC (0.2 Vp-p, H)	IC7 (6) (H, REC 0.9 Vp-p, PB 0.5 Vp-p)	
3	IC4 (4) REC/PB (0.5 Vp-p, 5.12 MHz)	IC2 (7) REC (0.9 Vp-p, H)	
4	IC4 (8) REC (2.1 Vp-p, H)	IC9 (7) REC/PB (1 Vp-p, 4.43 MHz)	
5	IC4 (10) PB (2.3 Vp-p, H)	IC11 (7) REC/PB (0.5 Vp-p, 4.43 MHz)	
6	IC4 (12) REC/PB (2.1 Vp-p, APPROX. 5.5 MHz)	IC12 (5), (14) REC (H, (5) 0.16 Vp-p, (14) 0.9 Vp-p)	
7	IC4 (13) REC/PB (0.11 Vp-p, 10 MHz)	IC12 (6), (14) PB (H, (6) 0.15 Vp-p, (14) 1.1 Vp-p)	
8	IC4 REC/PB (V, (17) 2 Vp-p, (18) 5 Vp-p)	IC12 (24), (27) PB (H, (24) 0.7 Vp-p, (27) 0.35 Vp-p)	
9		IC12 (20) BF (4.3 Vp-p)	
10			

SS-20 [SERVO, SYSTEM CONTROL] **FU-19** [CASSETTE CONTROL SWITCH] **VR-3** [TRACKING VOLUME] **CS-3** [CASSETTE OFF SWITCH] **CS-4** [CASSETTE ON SWITCH] **RD-6** [ROTATION DE

Note:
- Color code of sleeving over the end of the jacket.

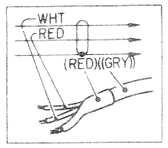

- ○— : parts extracted from the component side.
- ●— : parts extracted from the conductor side.
- : Soldering side
- : Component side
- : B+ pattern

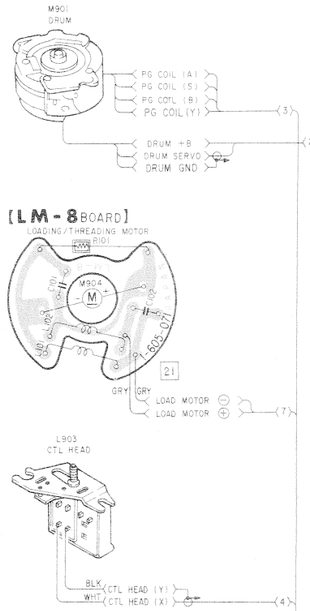

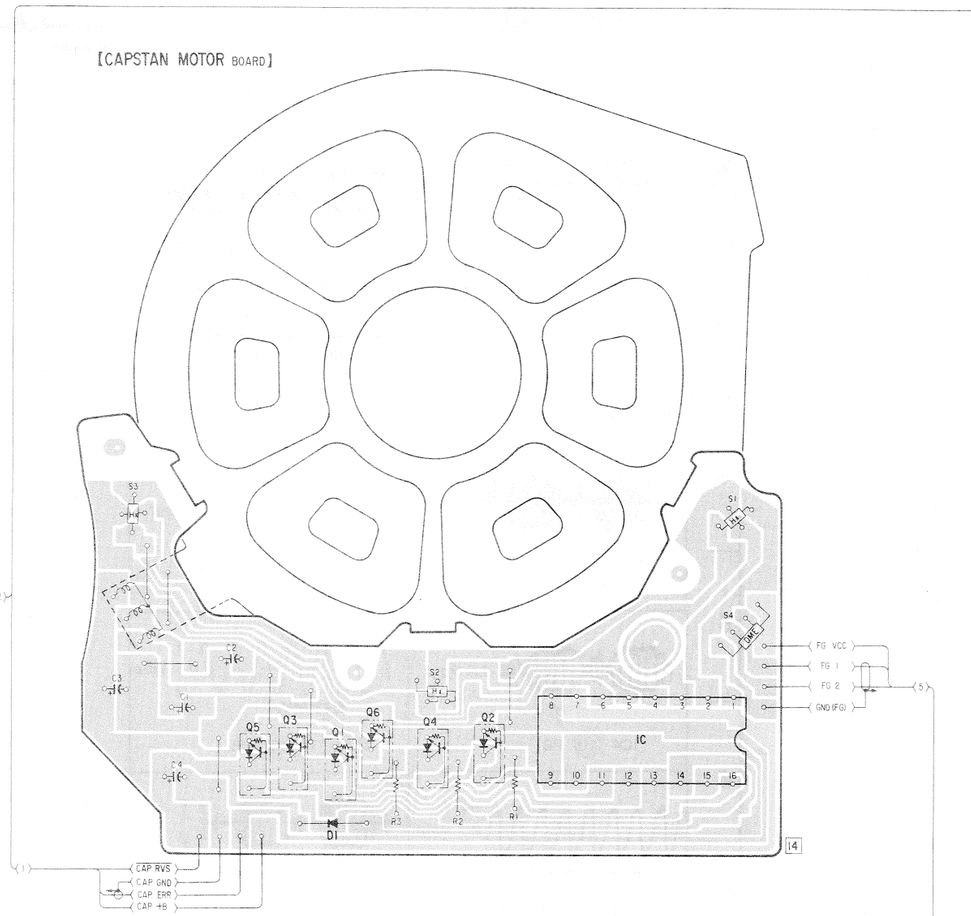

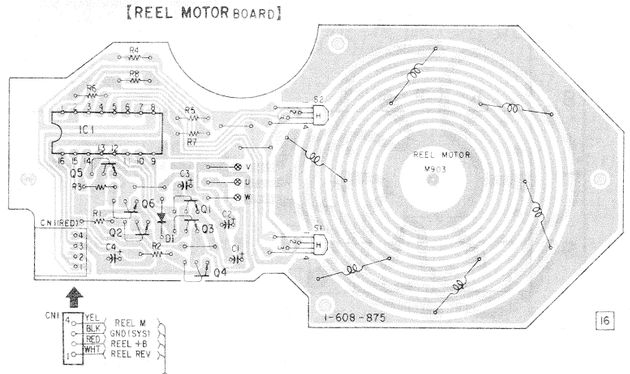

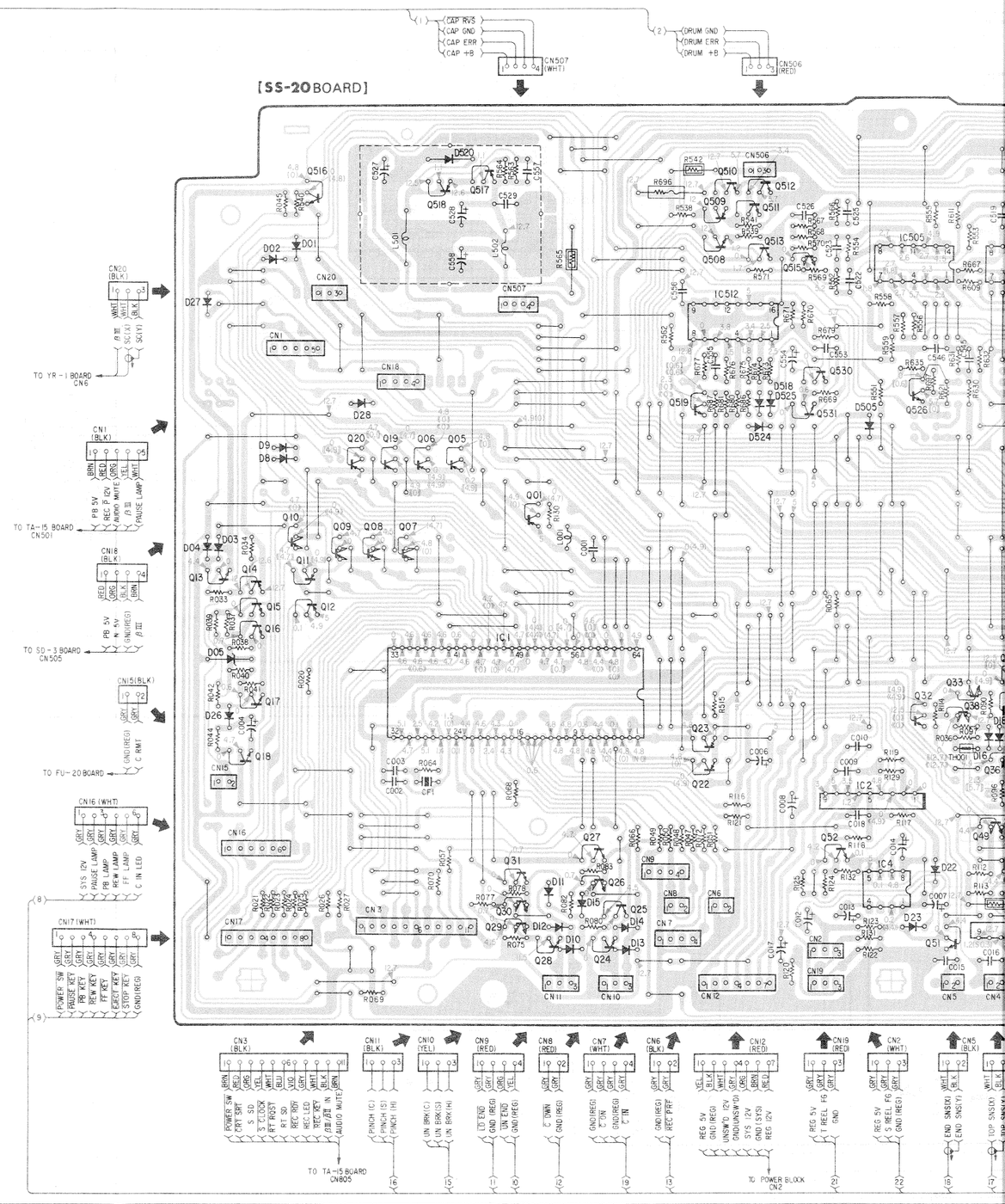

[CASSETTE OFF SWITCH] **CS-4** [CASSETTE ON SWITCH] **RD-6** [ROTATION DETECTOR] **RD-7** [ROTATION DETECTOR] **TR-13** [REEL MOTOR DRIVE] **CAPSTAN MOTOR** **REEL M**

K L M N O P Q R S T U V W X Y Z

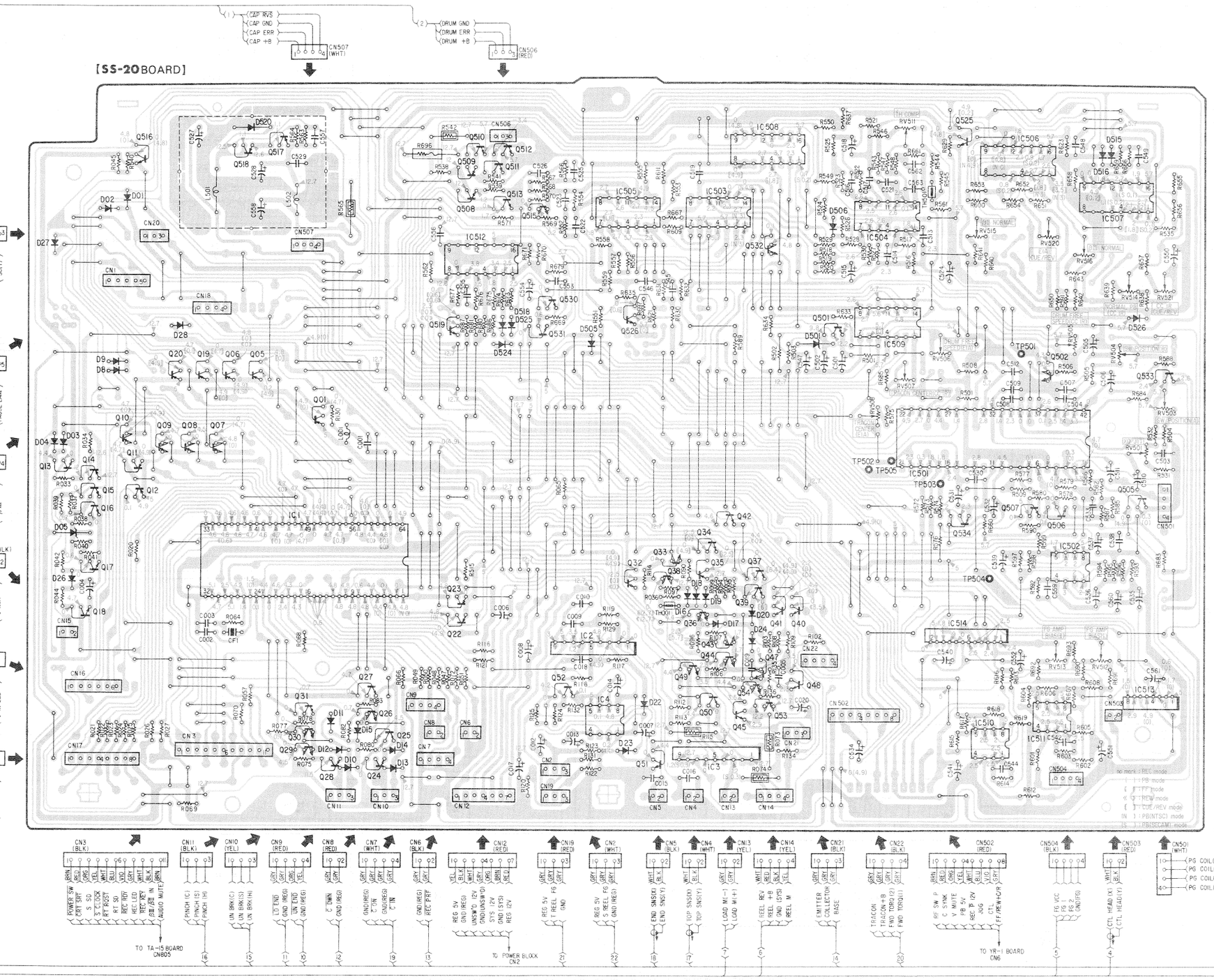

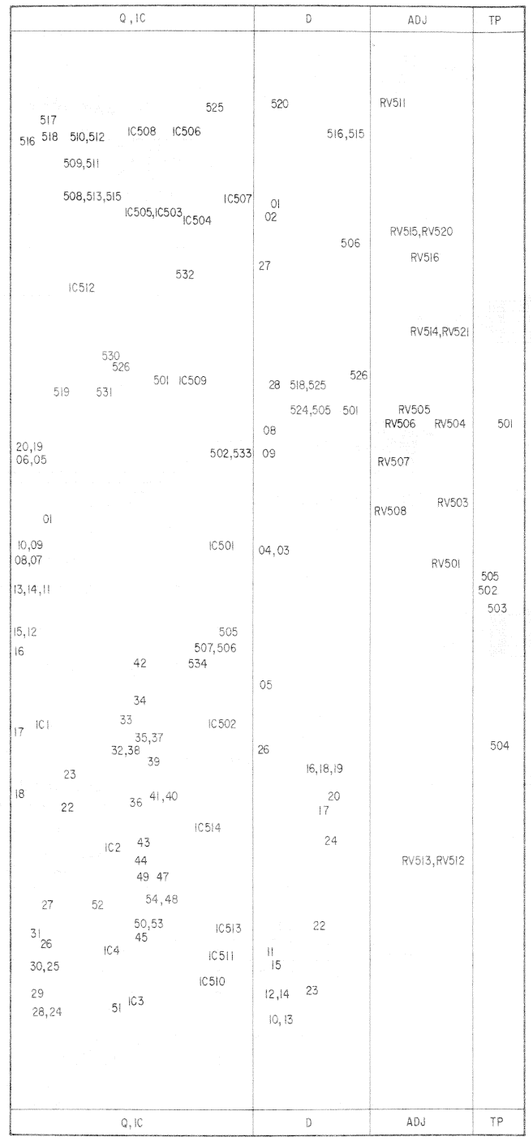

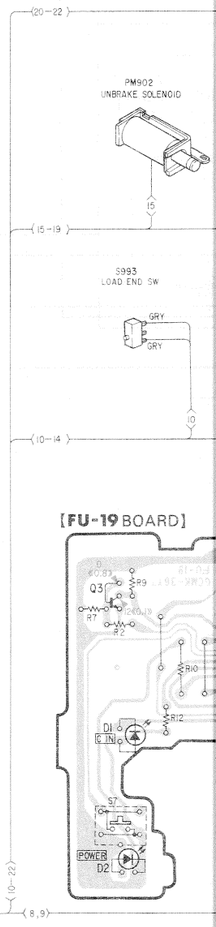

ECTOR] RD-7 [ROTATION DETECTOR] TR-13 [REEL MOTOR DRIVE] CAPSTAN MOTOR REEL MOTOR

Q R S T U V W X Y Z A1 B1 C1 D1 E1 F1

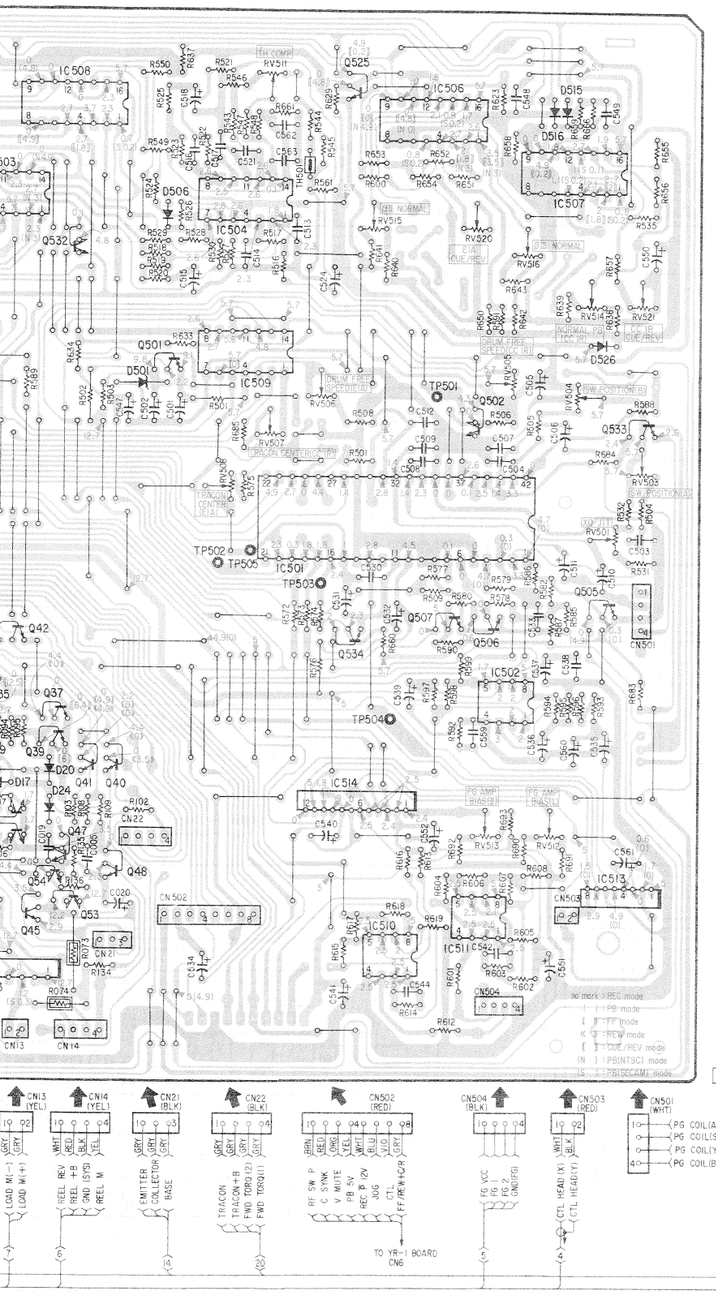

Q, IC	D	ADJ	TP
517 516 518 510,512 509,511 508,513,515 IC505,IC503 IC504 IC512 530 526 519 531 20,19 06,05 01 10,09 08,07 13,14,11 15,12 16 17 IC1 18 23 22 27 52 31 26 IC4 30,25 29 28,24 51 IC3	525 IC508 IC506 IC507 01 02 532 27 501 IC509 502,533 IC501 505 507,506 534 42 34 33 35,37 32,38 39 41,40 36 IC502 IC514 43 44 49 47 54,48 50,53 45 IC513 IC511 IC510	520 516,515 01 02 506 27 526 28 518,525 524,505 501 08 09 04,03 05 26 16,18,19 20 17 24 22 11 15 12,14 23 10,13	RV511 RV515,RV520 RV516 RV514,RV521 RV505 RV506 RV504 RV507 RV508 RV503 RV501 RV513,RV512	501 505 502 503 504
Q, IC	D	ADJ	TP

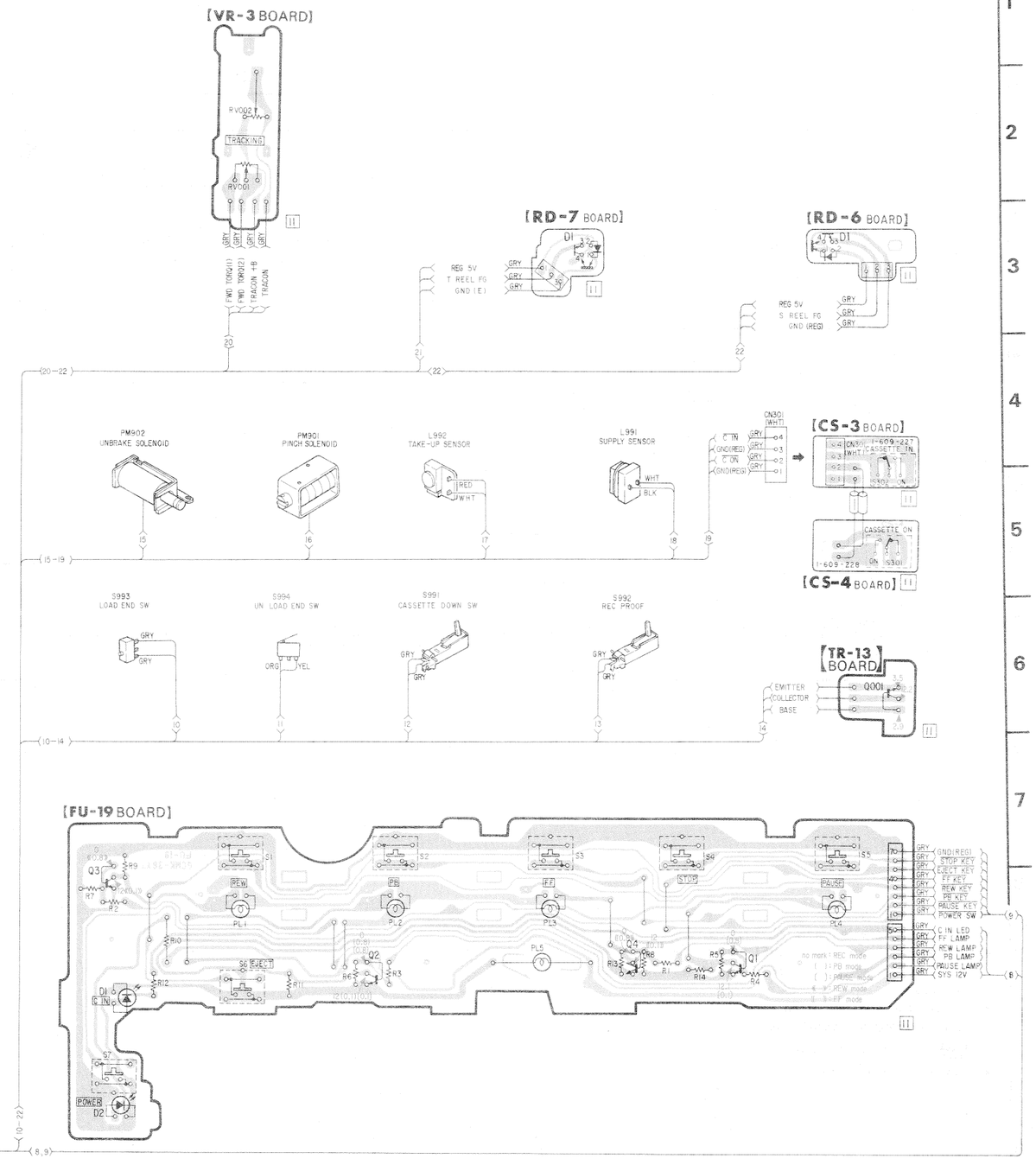

SS-20 (SERVO) BOARD

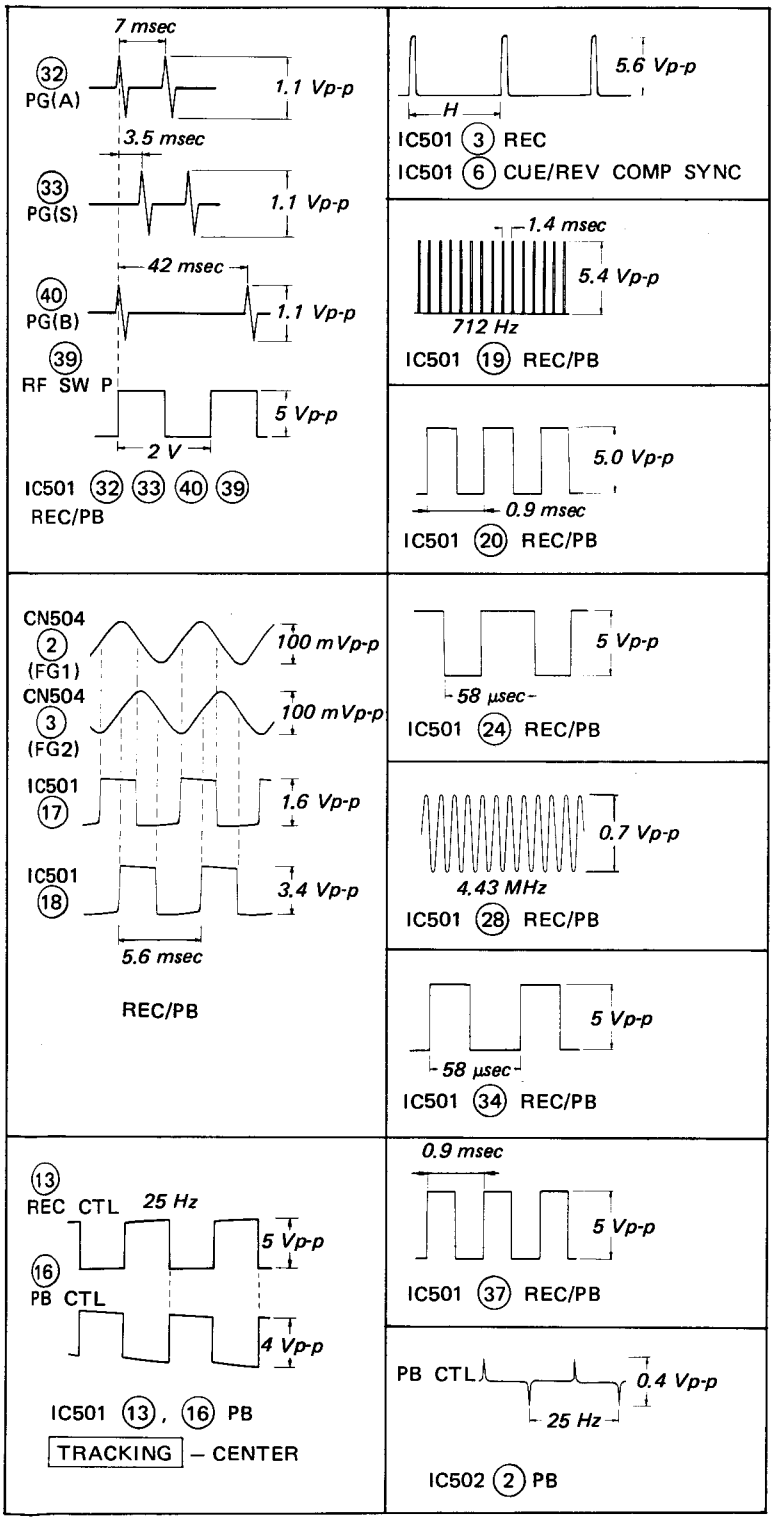

SS-20 (SYSTEM CONTROL) BOARD

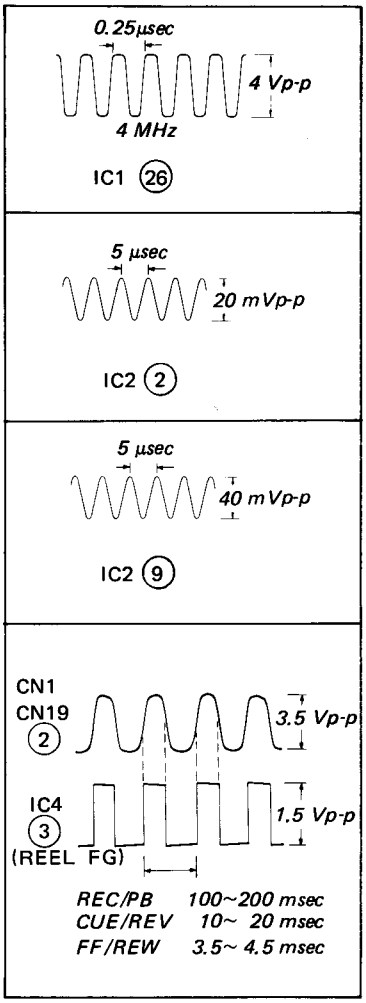

SERVO, SYSTEM CONTROL

– Ref. No. CAPSTAN MOTOR BOARD: 5100 series, REEL MOTOR BOARD: 5000 series –

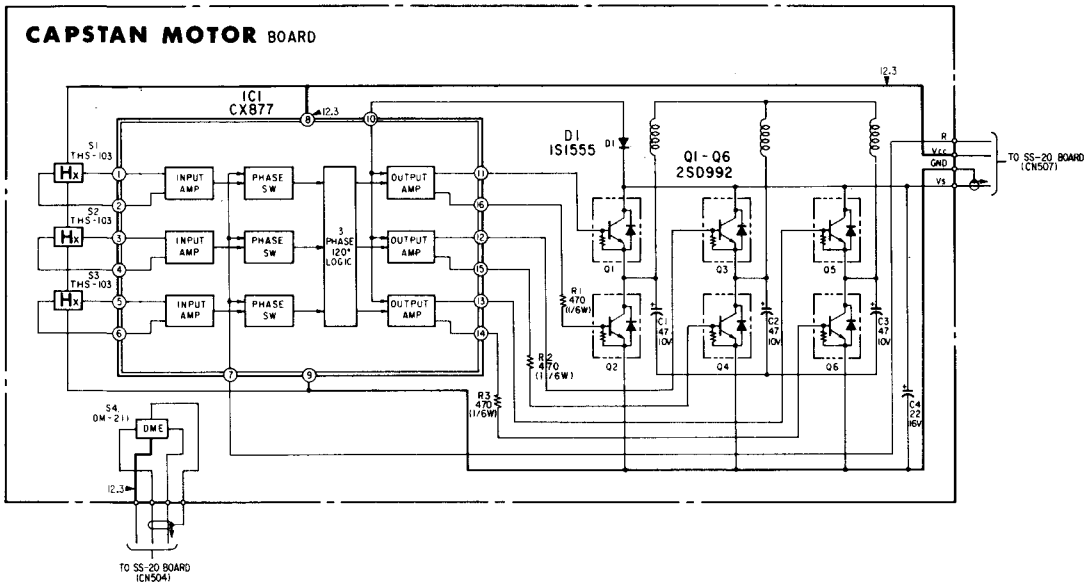

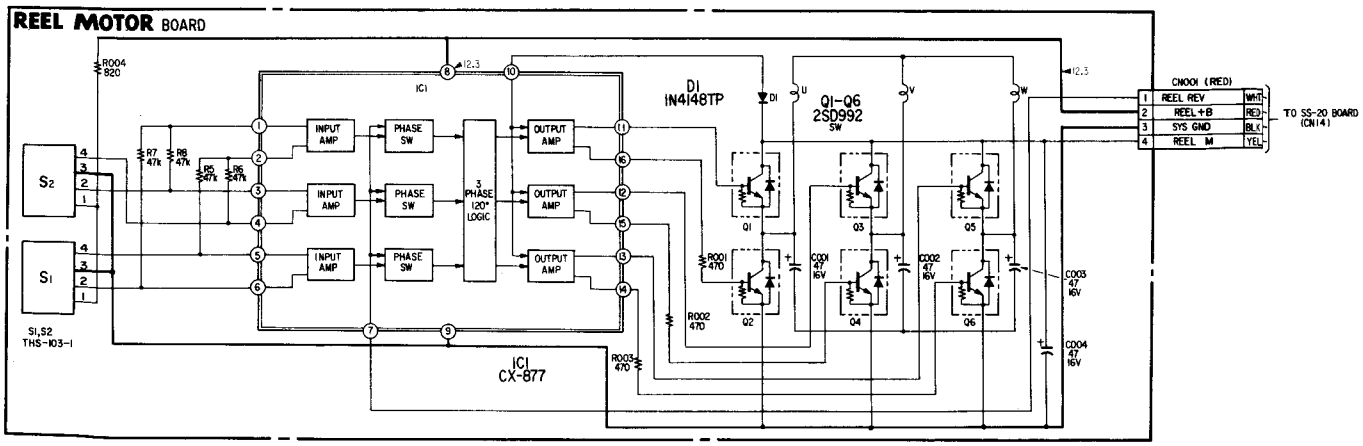

Note:

- All resistors are in ohms, 1/6 W unless otherwise noted.
- All capacitors are in μF (p:pF) unless otherwise noted. 50 V or less are not indicated except for electrolytic capacitors.
- All variable and semi-fixed resistors have characteristic curve B, unless otherwise noted.
- : Nonflamable resistor
- : Fusible resistor
- : B + bus.
- The voltage value is a reference value between the grounding when the color bar signal is received from a color bar generator.

The voltage value is measured using a digital tester (10 MΩ/V).

When indicating parts by reference number, please include the board name.

SS-20 [SERVO, SYSTEM CONTROL] **FU-19** [CASSETTE CONTROL SWITCH] [TRACKING VOLUME] **CS-3** **CS-4** [CASSETTE ON SWITCH] **RD-6**

– Ref. No. SS-20 BOARD: 2000 series, FU-19 BOARD: 5000 series, VR-3: 9000 series, CS-3, CS-4: 9300 series, RD-6, RD-7: 9200 series, TR-13 BOARD: 2000 series, CAPSTAN MOTOR BOARD: 5100 series, REEL MOTOR BOARD: 5000 series –

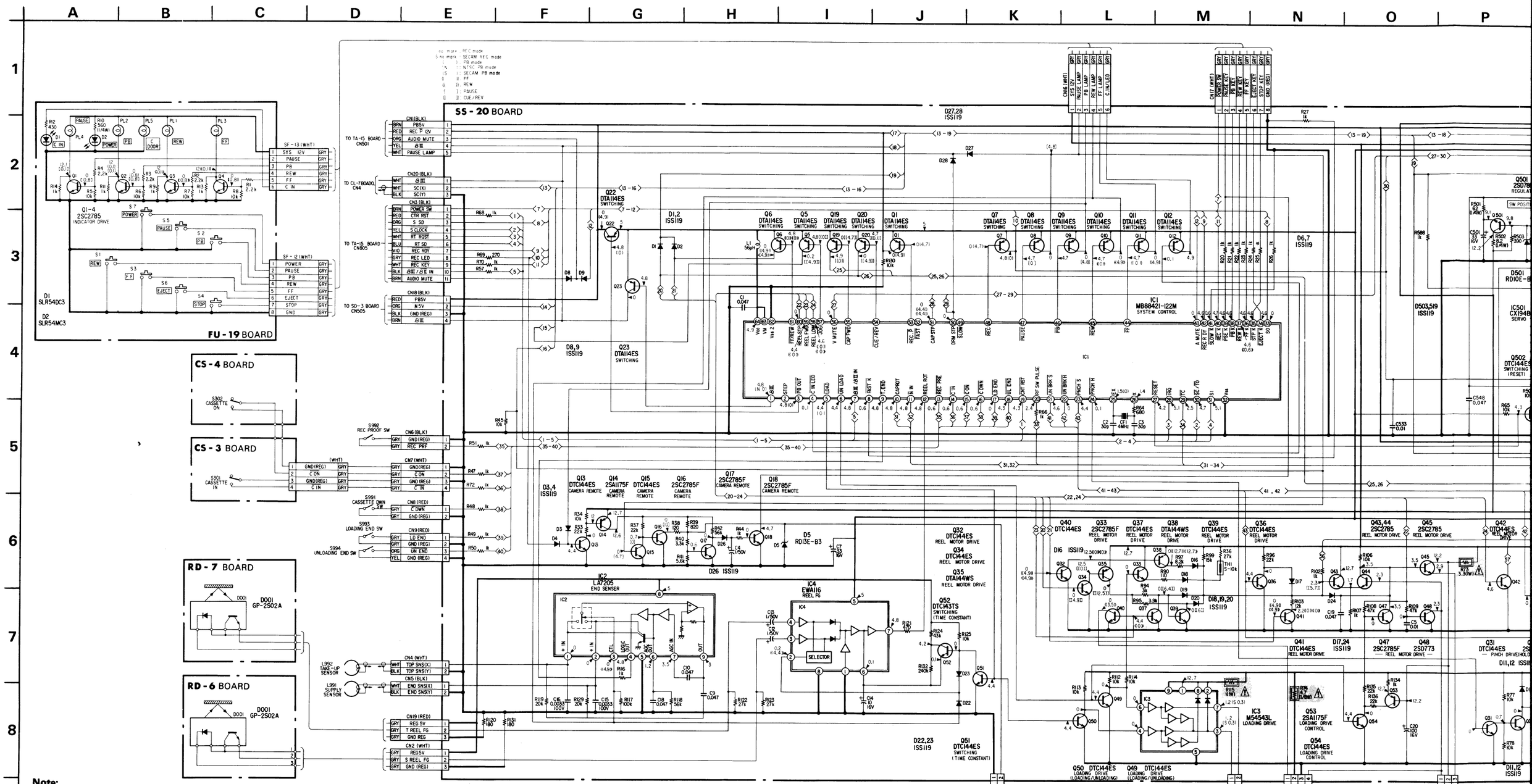

Note:

- All resistors are in ohms, 1/6 W unless otherwise noted.
- All capacitors are in μF (p:pF) unless otherwise noted. 50 V or less are not indicated except for electrolytic capacitors.
- All variable and semi-fixed resistors have characteristic curve B, unless otherwise noted.
- ▭ : Nonflamable resistor
- ▭ : Fusible resistor

- ——— : B + bus.
- The voltage value is a reference value between the grounding when the color bar signal is received from a color bar generator.

The voltage value is measured using a digital tester (10 MΩ/V).

- digital transistor (DTA114ES, DTC143TS, DTC144ES): transistor with resistors.

G VOLUME] CS-3 CS-4 [CASSETTE ON SWITCH] RD-6 RD-7 [ROTATION DETECTOR] TR-13 [REEL MOTOR DRIVE]

Note: The components identified by shading and mark ⚠ are critical for safety. Replace only with part number specified.

When indicating parts by reference number, please include the board name.

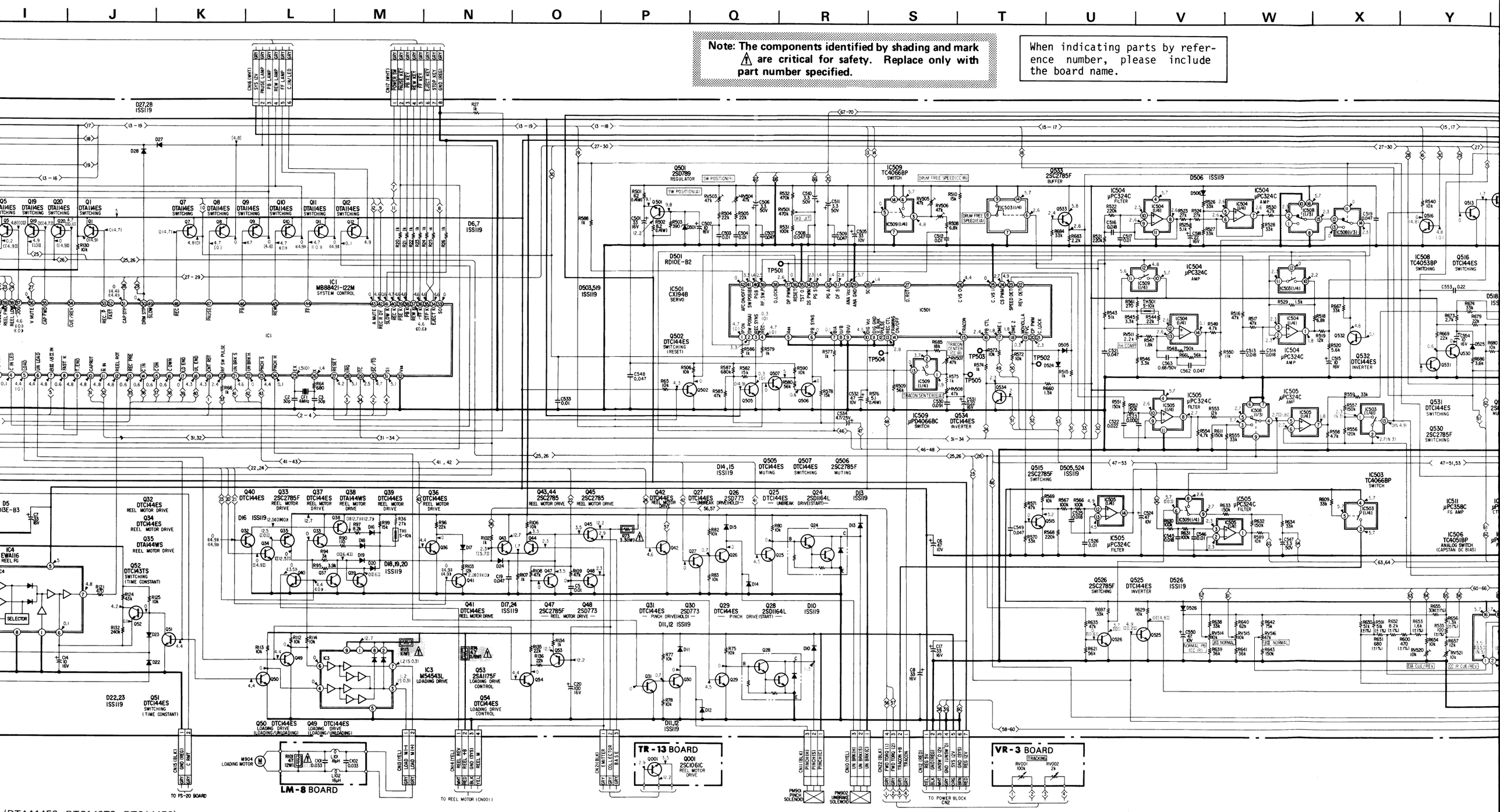

(DTA114ES, DTC143TS, DTC144ES):
sistors.

RD-7 [ROTATION DETECTOR] **TR-13** [REEL MOTOR DRIVE]

Note: The components identified by shading and mark ⚠ are critical for safety. Replace only with part number specified.

When indicating parts by reference number, please include the board name.

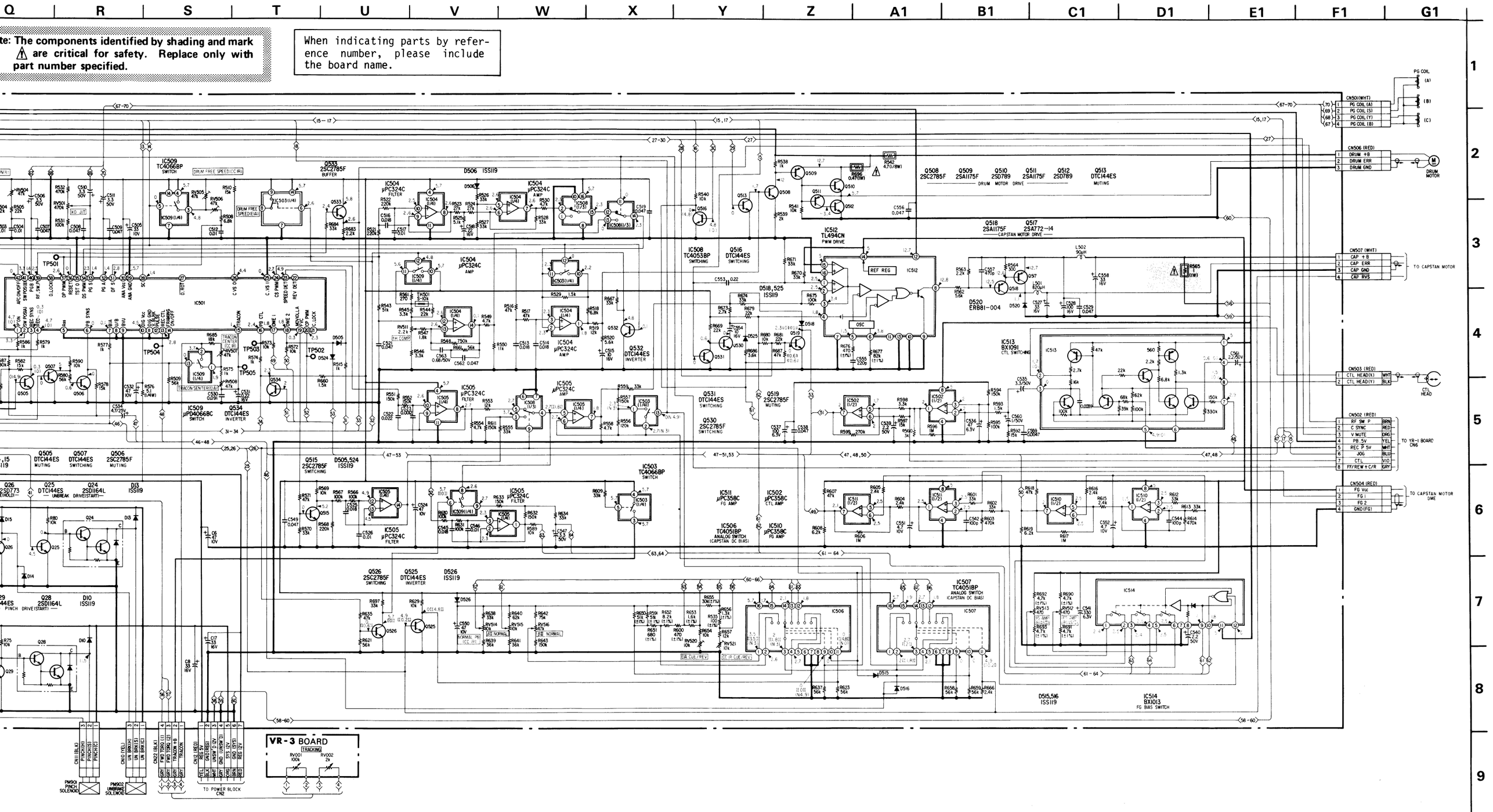

– Ref. No. TA-15 BOARD, TUNER: 7000 series, AUDIO: 7500 series, TIMER: 7800 series, TM-48, TM-49 BOARD: 8000 series, N BOARD: 9600 series, FU-20 BOARD: 5000 series –

TA-15 BOARD

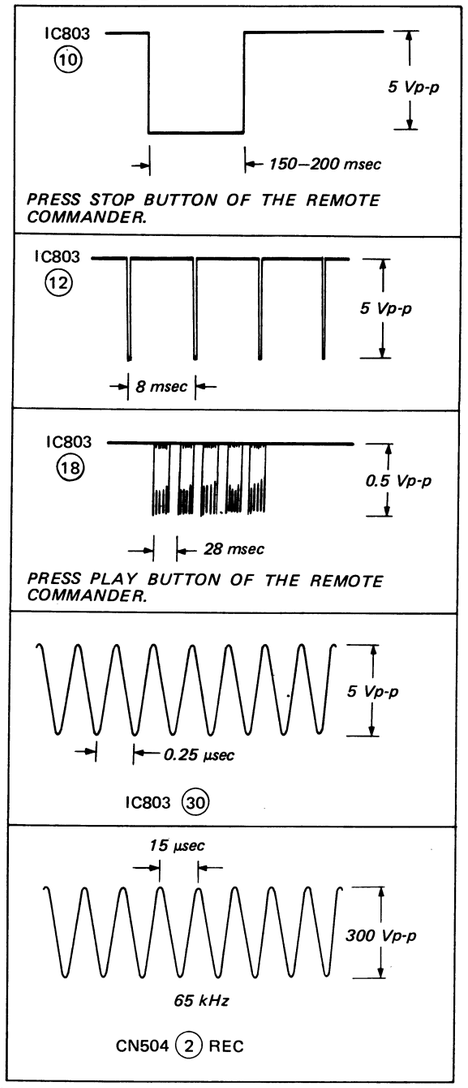

Note:

- Color code of sleeving over the end of the jacket.

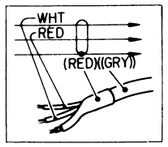

- ○—: indicates a lead wire mounted on the component side.
- ●—: indicates a lead wier mounted on the printed side.
- ▒ : Soldering side
- ▒ : B+ pattern

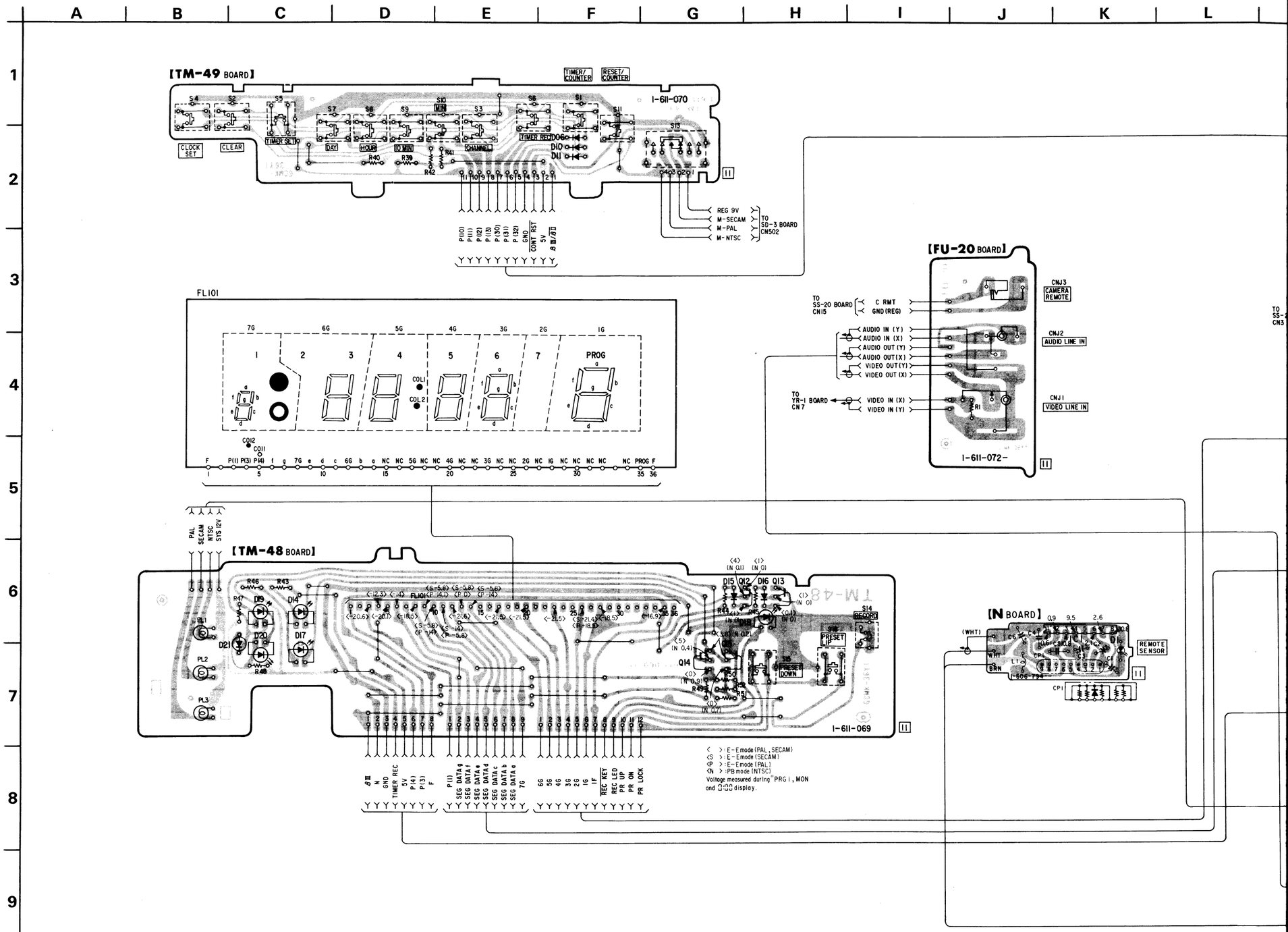

N [PHOTOSENSING BLOCK] **FU-20** [INPUT TERMINAL]

TUNER,AUDIO,TIMER TUNER,AUD

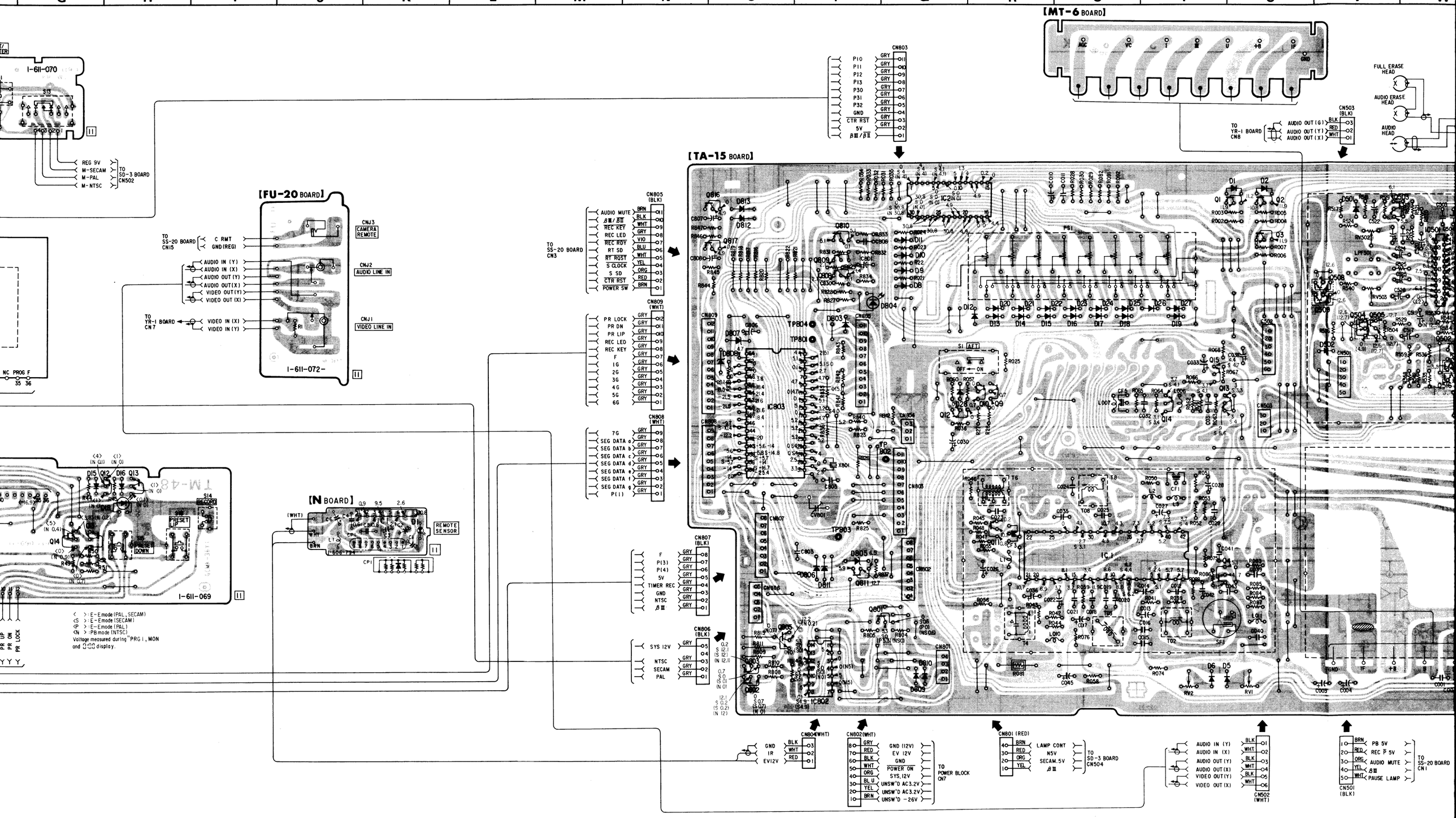

T TERMINAL]

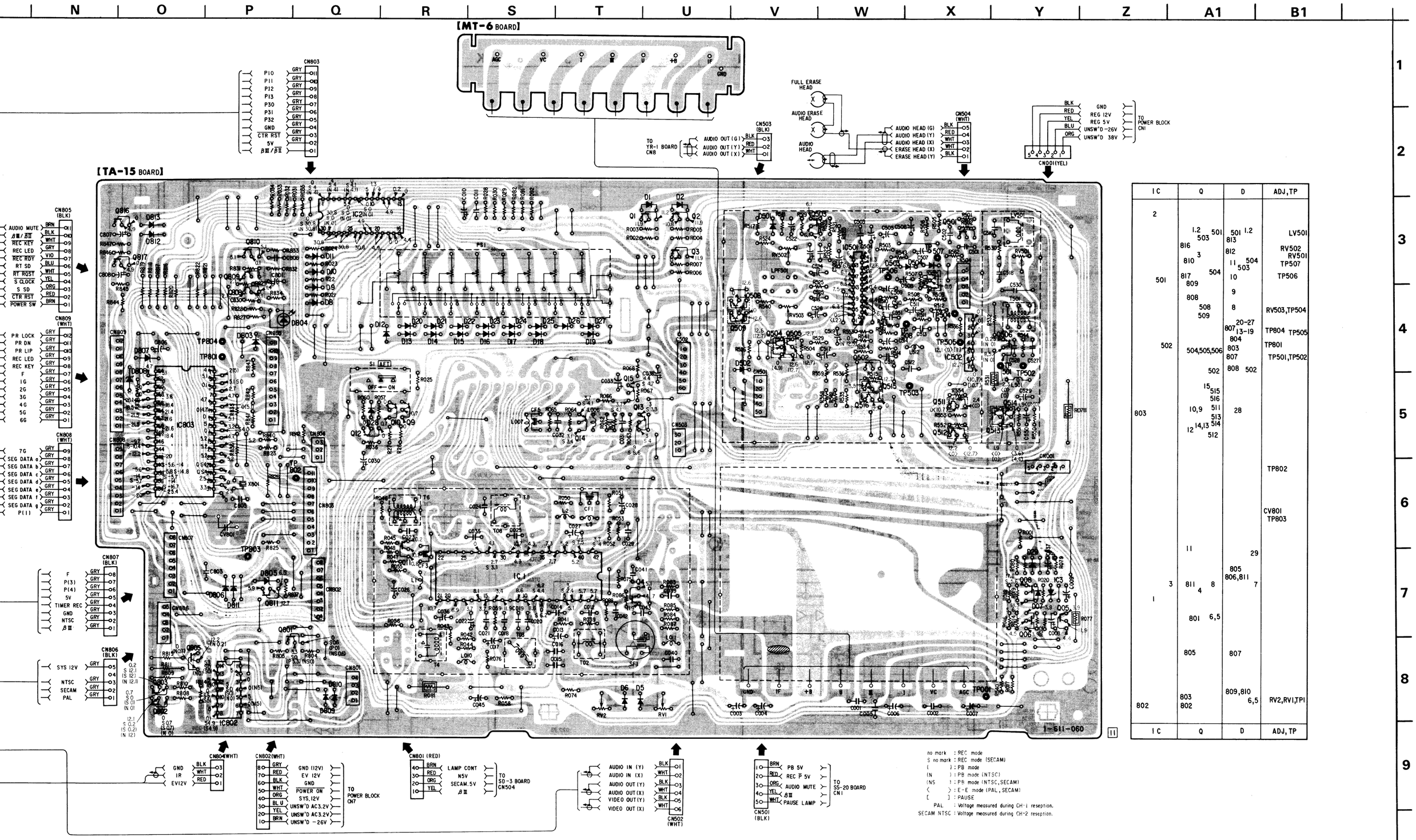

IC	Q	D	ADJ,TP
2	1.2 501 503 816 3 810 504 817 809 808 508 509 502 504,505,506 502 15 515 516 10,9 511 513 514 12 14,13 512 11 3 811 4 8 801 6,5 805 803 802	501 1.2 813 812 11 504 503 10 9 8 807 20-27 13-19 804 803 807 808 502 28 29 805 806,811 7 807 809,810 6,5	LV501 RV502 RV501 TP507 TP506 RV503,TP504 TP804 TP505 TP801 TP501,TP502 TP802 CV801 TP803 RV2,RV1,TP1
803			
501			
1			
802			

no mark : REC mode
S no mark : REC mode (SECAM)
( ) : PB mode
(N) : PB mode (NTSC)
(NS) : PB mode (NTSC,SECAM)
〈 〉 : E-E mode (PAL,SECAM)
[ ] : PAUSE
PAL : Voltage measured during CH-1 reseption.
SECAM NTSC : Voltage measured during CH-2 reseption.

– Ref. No. TA-15 BOARD, TUNER: 7000 series, AUDIO: 7500 series, TIMER: 7800 series, TM-48, TM-49 BOARD: 8000 series,

N BOARD: 9600 series, FU-20 BOARD: 5000 series –

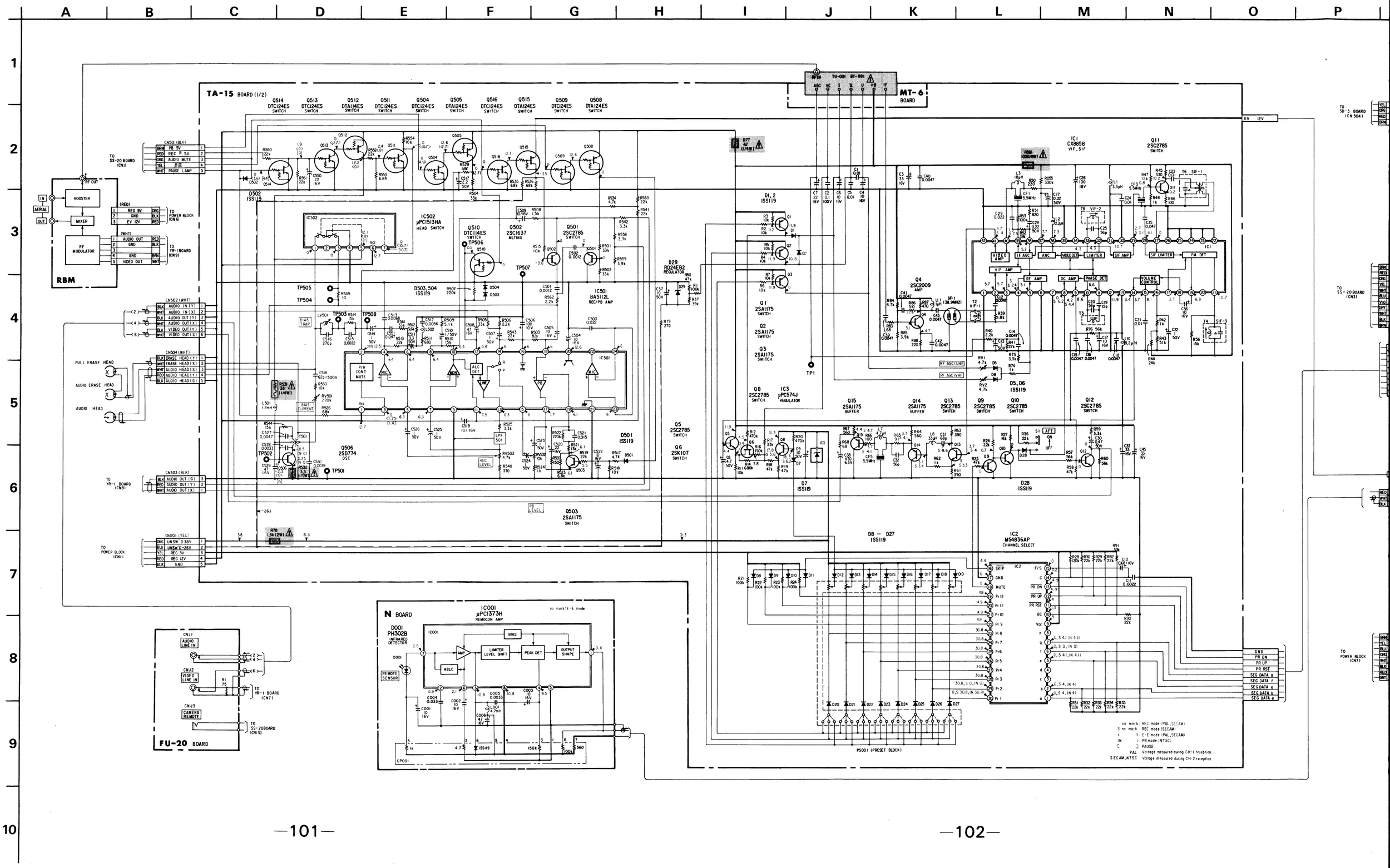

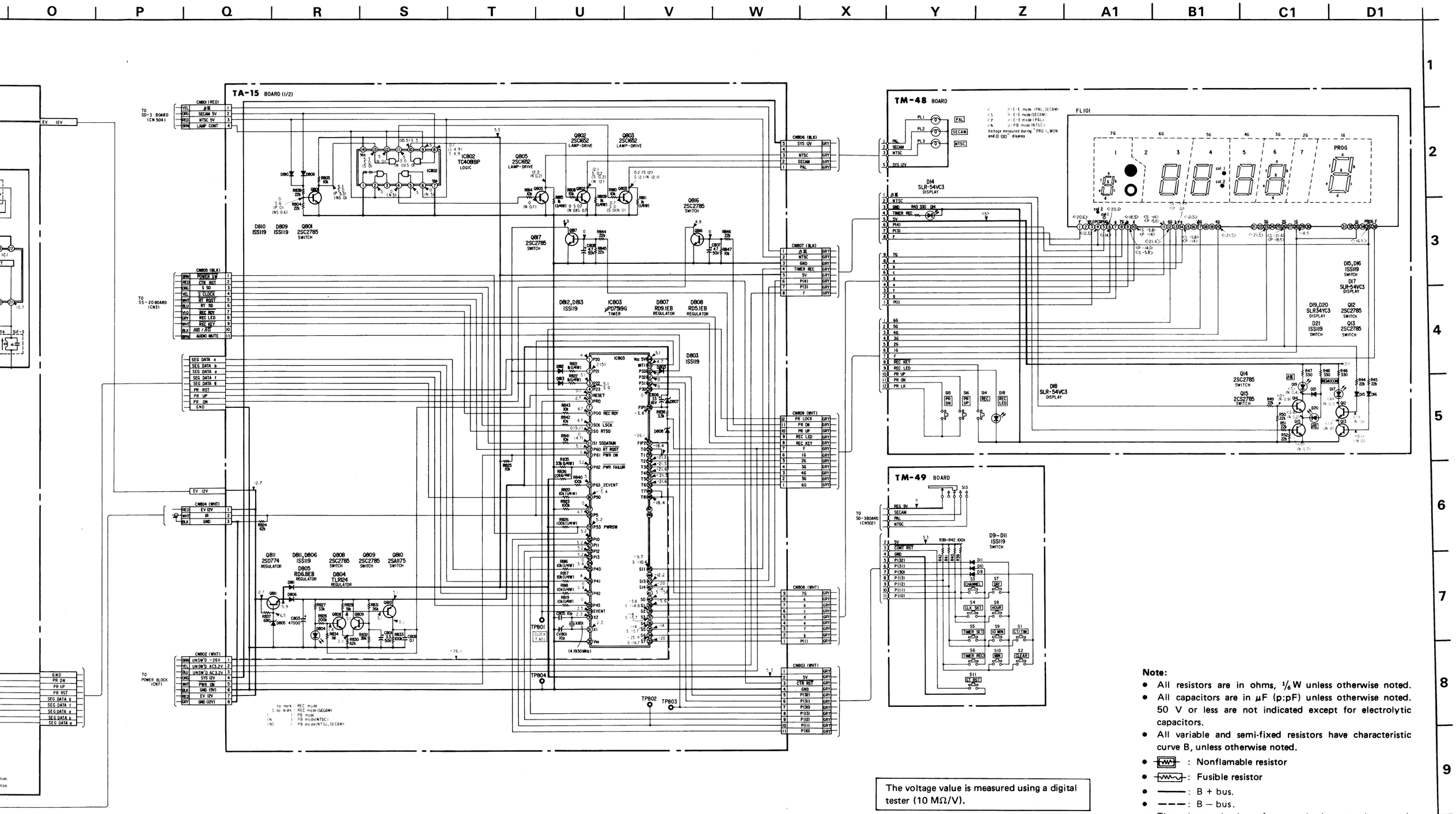

Note:

- All resistors are in ohms, 1/6 W unless otherwise noted.
- All capacitors are in μF (p:pF) unless otherwise noted. 50 V or less are not indicated except for electrolytic capacitors.
- All variable and semi-fixed resistors have characteristic curve B, unless otherwise noted.
- : Nonflamable resistor
- : Fusible resistor
- : B + bus.
- : B − bus.
- The voltage value is a reference value between the grounding when the color bar signal is received from a color bar generator.

The voltage value is measured using a digital tester (10 MΩ/V).

Note: The components identified by shading and mark ⚠ are critical for safety. Replace only with part number specified.

When indicating parts by reference number, please include the board name.

SR-15 M C D R [POWER BLOCK, SWITCHING REGULATOR]

Note: Model identification of POWER BLOCK is indicated by label on it.

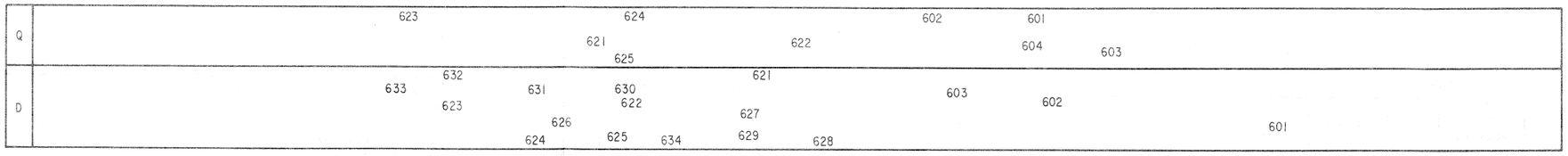

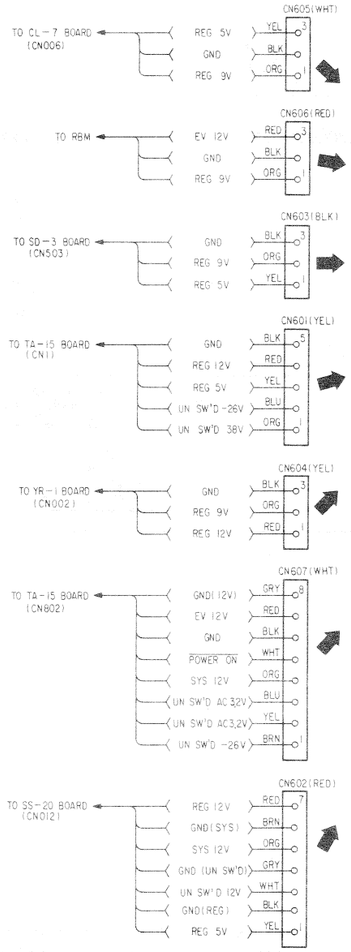

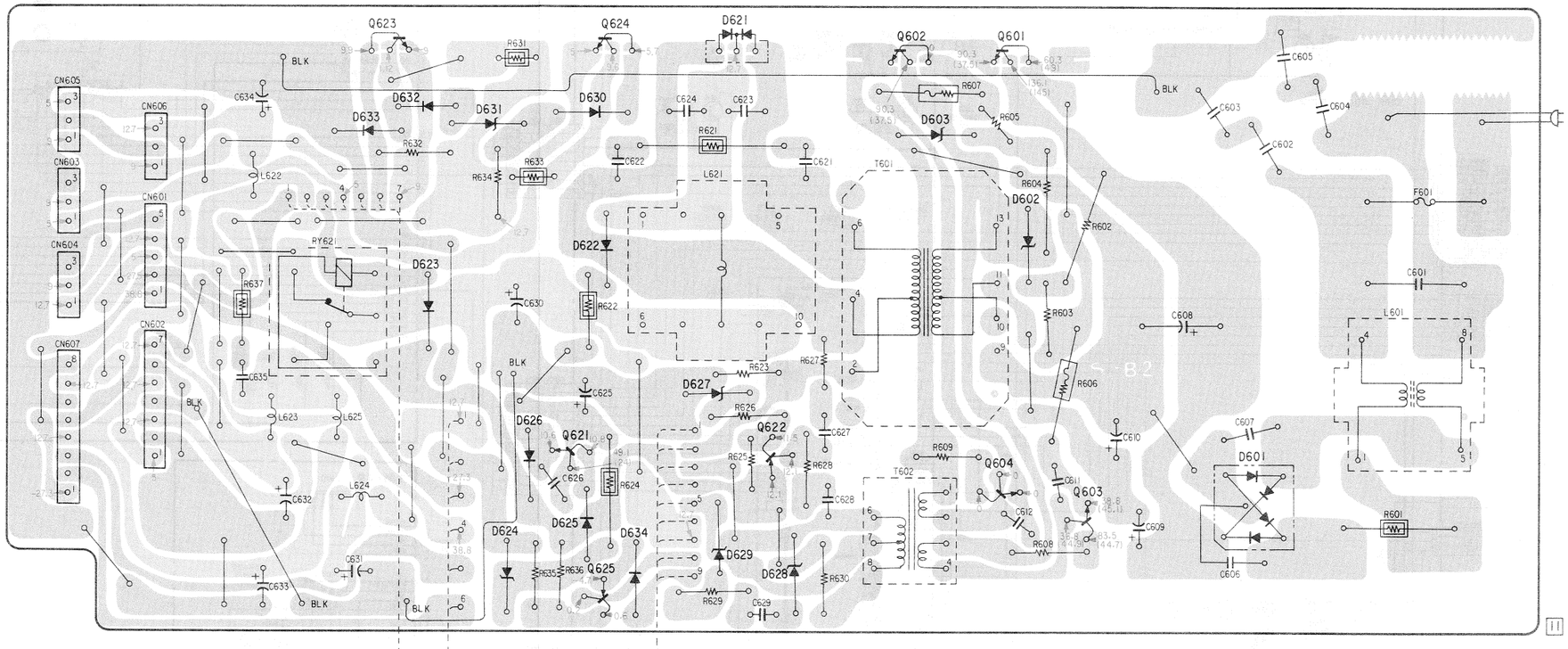

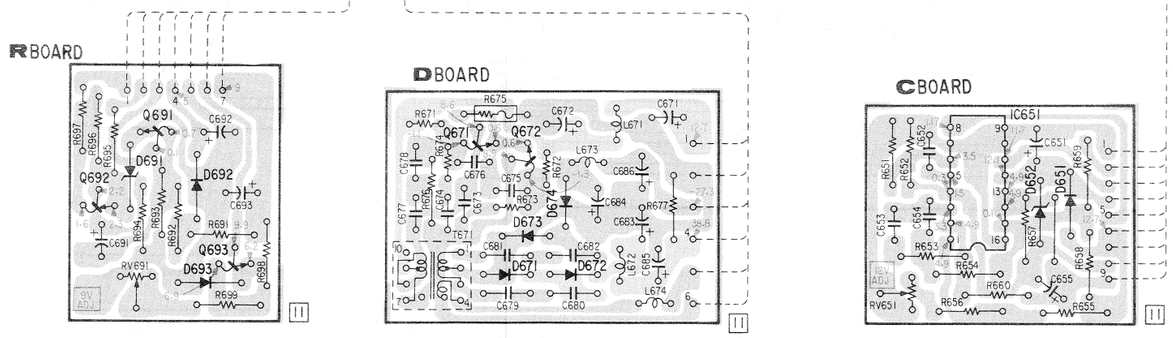

Note:
- Color code of sleeving over the end of the jacket.

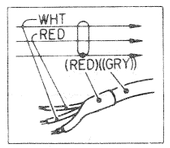

- ○—: indicates a lead wire mounted on the component side.
- ●—: indicates a lead wier mounted on the printed side.
- : Soldering side
- : B+ pattern
- : B- pattern

SR-15 M C D R

[POWER BLOCK, SWITCHING REGULATOR]

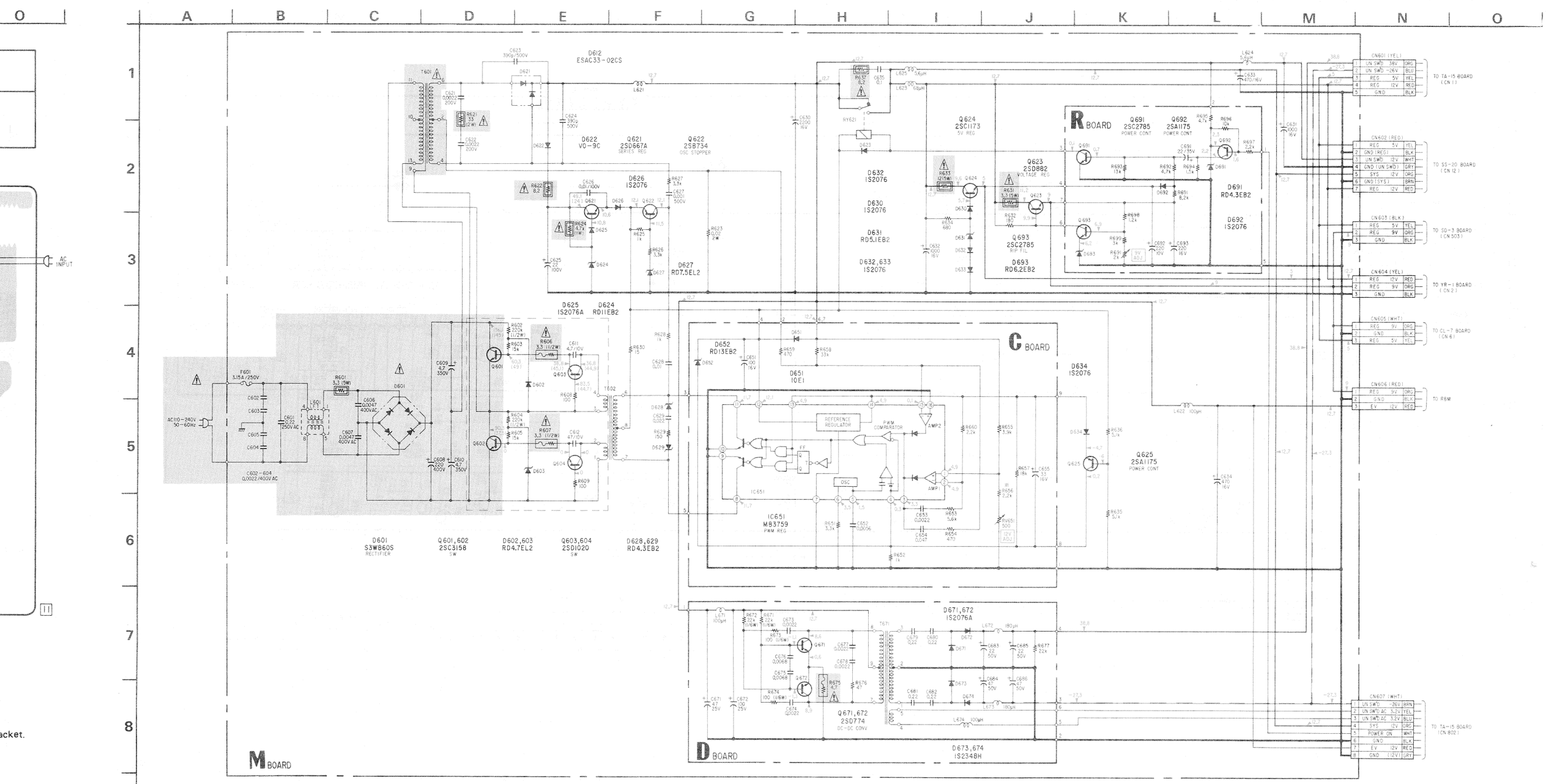

Note: Model identification of POWER BLOCK is indicated by label on it.

- No mark: E-E mode, 220 V 50 Hz
- ( ): E-E mode, 110 V 50 Hz
- [ ] Voltages are measured from emitter of Q602
- ※ : selected to yield optimum performance.

Note:

- All resistors are in ohms, 1/6 W unless otherwise noted.
- All capacitors are in μF (p:pF) unless otherwise noted. 50 V or less are not indicated except for electrolytic capacitors.

- All variable and semi-fixed resistors have characteristic curve B, unless otherwise noted.
- : Nonflamable resistor
- : Fusible resistor
- : B + bus.
- : B − bus.
- The voltage value is a reference value between the grounding when the color bar signal is received from a color bar generator.

The voltage value is measured using a digital tester (10 MΩ/V).

Note: The components identified by shading and mark ⚠ are critical for safety. Replace only with part number specified.

When indicating parts by reference number, please include the board name.

SR-15S POWER BLOCK

SR-15S POWER BLOCK

SR-15S [POWER BLOCK, SWITCHING REGULATOR]

Note: Model identification of POWER BLOCK is indicated by label on it.

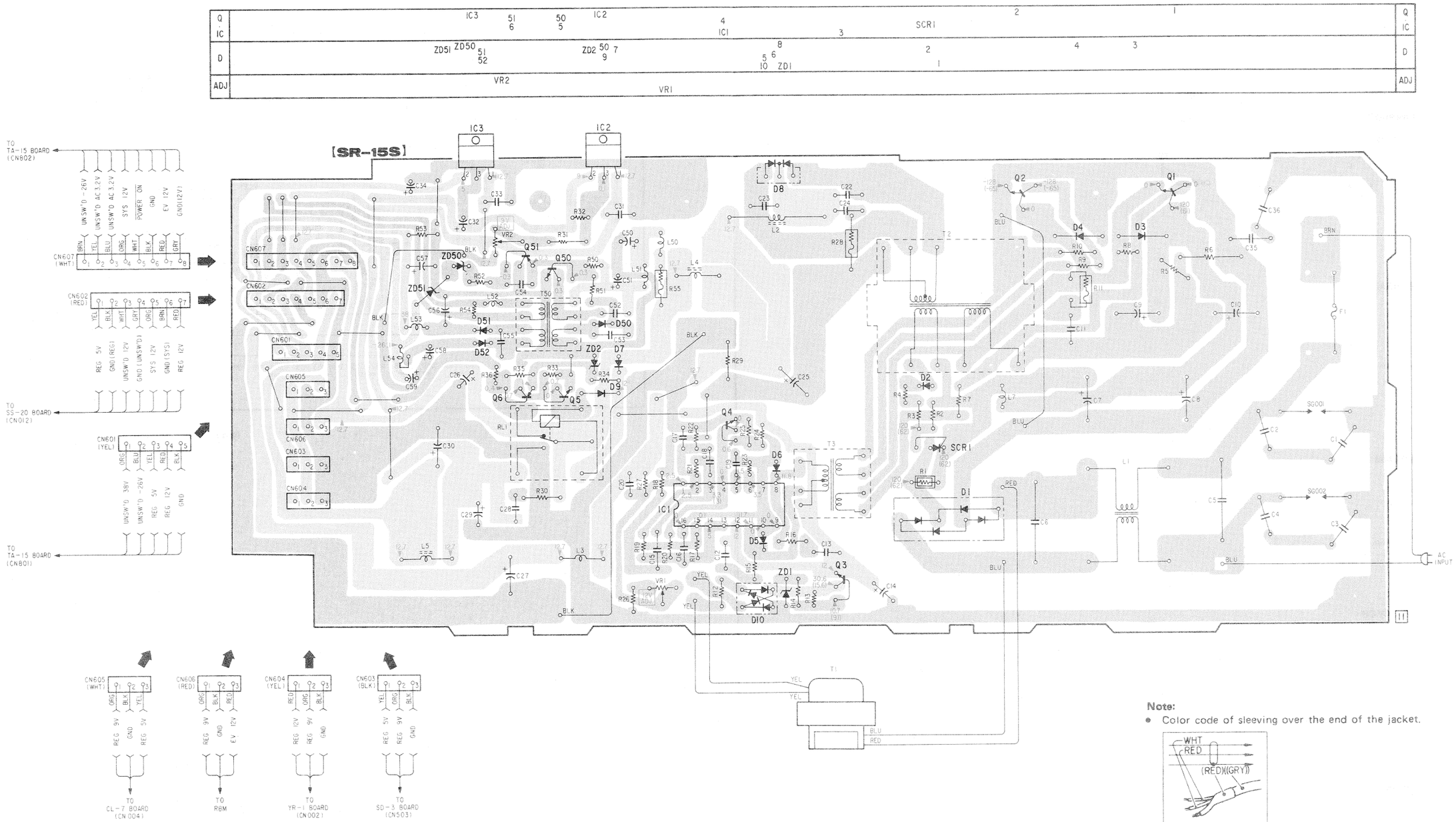

Note:

- Color code of sleeving over the end of the jacket.

- ○—: indicates a lead wire mounted on the component side.
- ●—: indicates a lead wier mounted on the printed side.
- : B+ pattern
- : B− pattern

SR-15S [POWER BLOCK, SWITCHING REGULATOR]

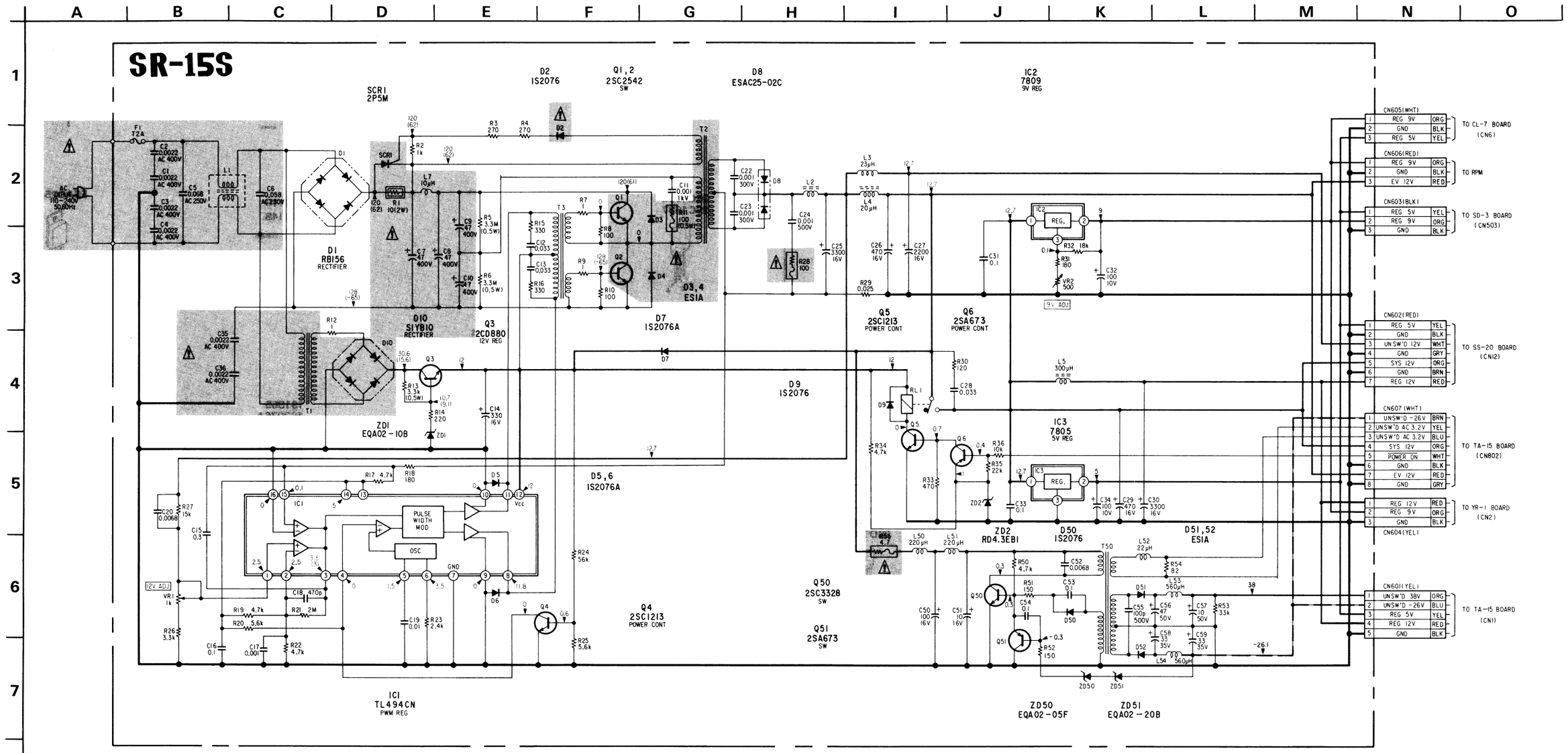

Note: Model identification of POWER BLOCK is indicated by label on it.

- No mark: E-E mode, 220 V 50 Hz
- ( ): E-E mode, 110 V 50 Hz

Note:

- All resistors are in ohms, 1/6 W unless otherwise noted.
- All capacitors are in μF (p:pF) unless otherwise noted. 50 V or less are not indicated except for electrolytic capacitors.
- All variable and semi-fixed resistors have characteristic curve B, unless otherwise noted.
- : Nonflamable resistor
- : Fusible resistor
- ——— : B + bus.
- – – – : B – bus.
- The voltage value is a reference value between the grounding when the color bar signal is received from a color bar generator.

The voltage value is measured using a digital tester (10 MΩ/V).

Note: The components identified by shading and mark ⚠ are critical for safety. Replace only with part number specified.

When indicating parts by reference number, please include the board name.

SECTION 4
EXPLODED VIEWS

NOTE:
- Items with no part number and no description are not stocked because they are seldom required for routine service.
- The construction parts of an assembled part are indicated with a collation number in the remark column.
- Items marked " ♦ " are not stocked since they are seldom required for routine service. Some delay should be anticipated when ordering these items.

The components identified by shading and mark ⚠ are critical for safety. Replace only with part number specified.

1. FRONT PANEL AND CABINET ASSEMBLIES

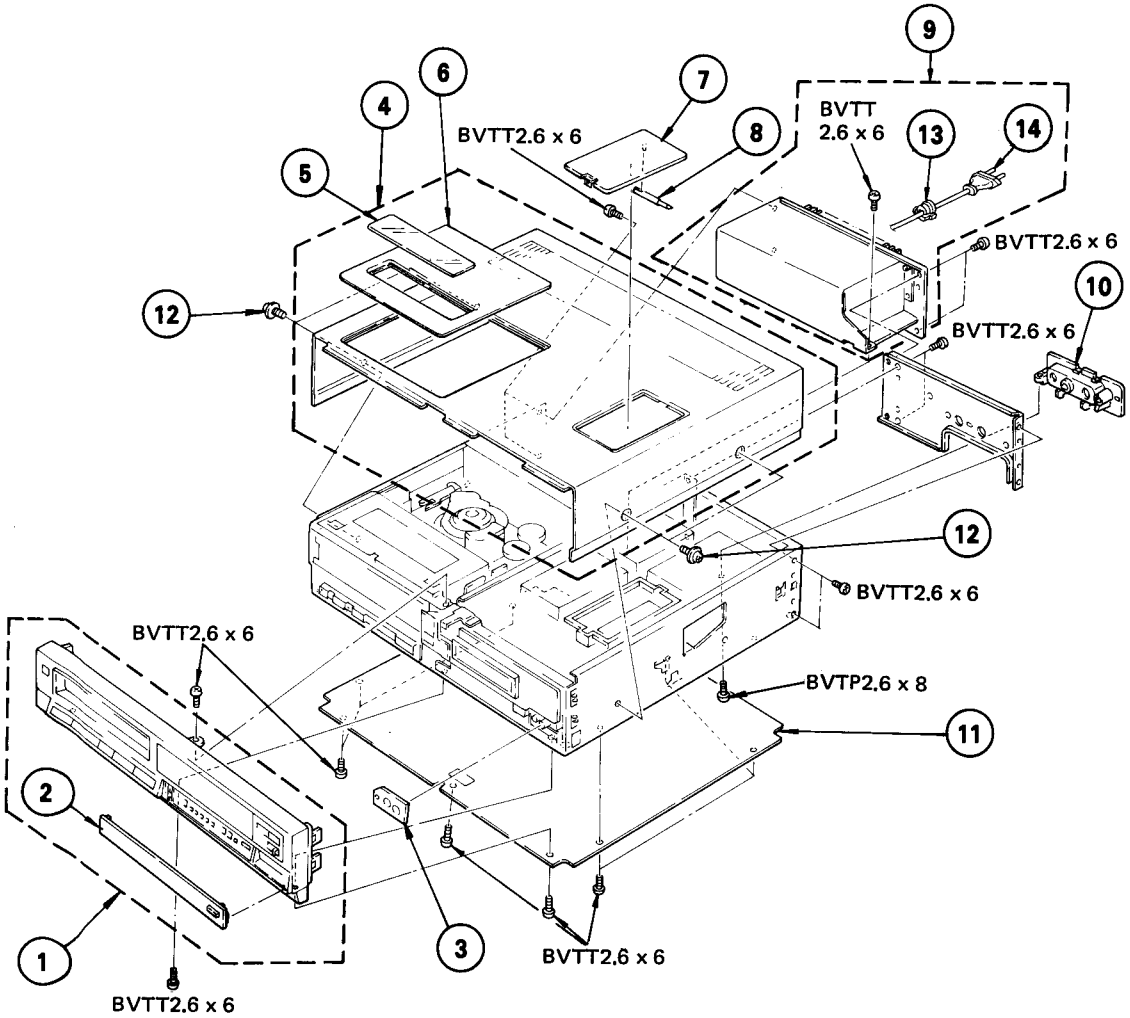

No.	Part No.	Description	Remark
1	A-6703-376-A	PANEL BLOCK ASSY, FRONT (N/GOLD)	2
	A-6703-392-A	PANEL BLOCK ASSY, FRONT (N/RED)	2
	A-6703-409-A	PANEL BLOCK ASSY, FRONT (N/SILVER)	2
2	X-3679-183-0	DOOR ASSY, TIMER (N/GOLD)	
	X-3679-190-0	DOOR ASSY, TIMER (N/RED)	
	X-3679-209-0	DOOR ASSY, TIMER (N/SILVER)	
3	♦:3-679-397-00	COVER, BNC	
4	X-3679-196-0	CASE ASSY, UPPER (N/GOLD)	5,6
	X-3679-191-0	CASE ASSY, UPPER (N/RED)	5,6
	X-3679-210-0	CASE ASSY, UPPER (N/SILVER)	5,6
5	3-682-625-00	WINDOW, TAPE	
6	3-679-380-11	PLATE, ORNAMENTAL	
7	3-682-630-01	LID, PRESET	
8	3-656-301-00	SCREWDRIVER, CONTROL	
9	⚠1-413-161-00	POWER BLOCK (SR-15)	1,3,14
10	3-682-615-00	PANEL, REAR	
11	3-682-631-00	PLATE, BOTTOM	
12	3-703-354-01	SCREW (OS), CASE, CLAW	
13	3-703-244-00	STOPPER, CORD	
14	1-534-817-12	CORD, POWER	

2. TUNER, TIMER AND POWER ASSEMBLIES

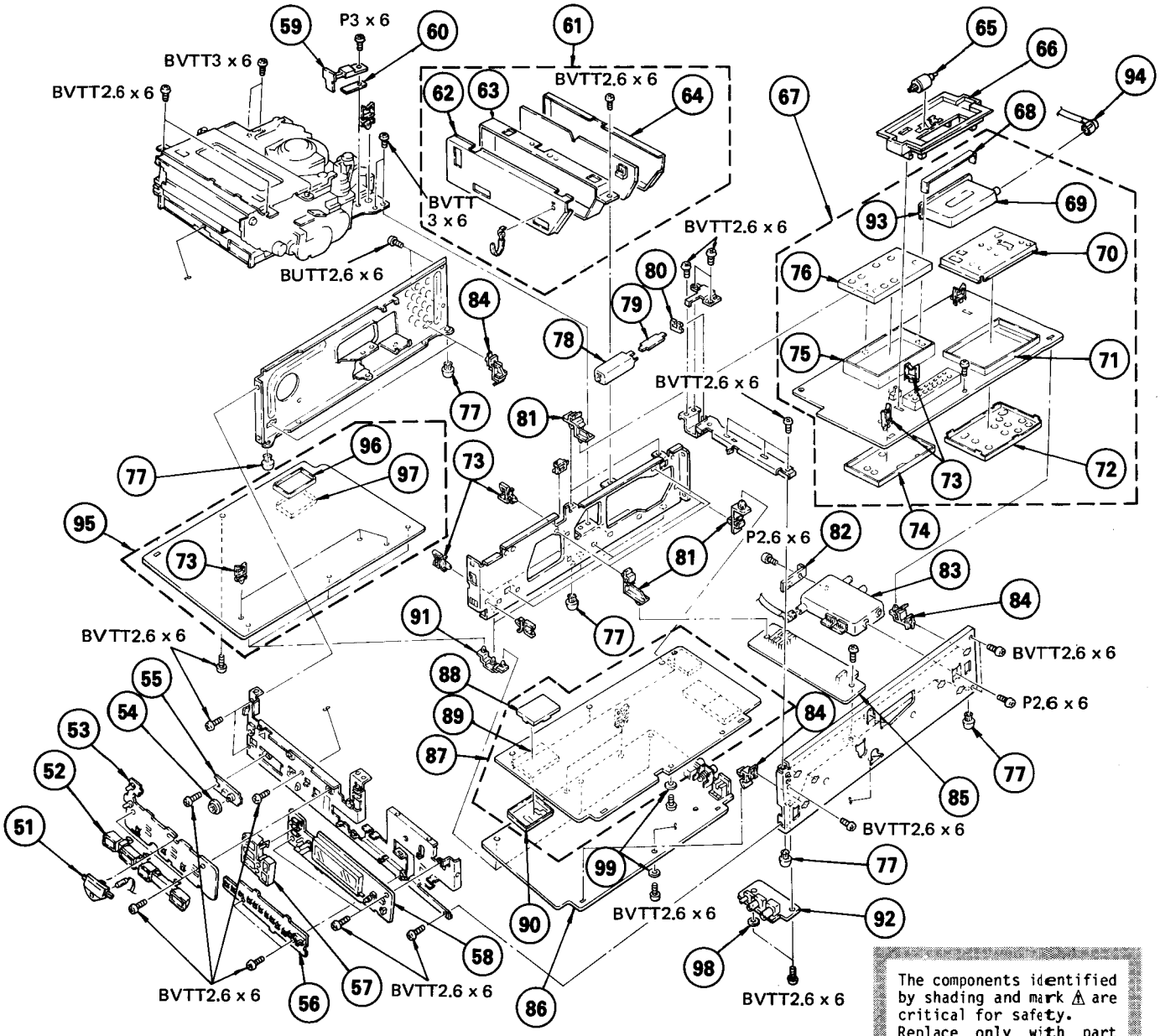

The components identified by shading and mark ⚠ are critical for safety. Replace only with part number specified.

No.	Part No.	Description	Remark
51	♦:3-679-381-00	PLATE, LIGHT GUIDE	
52	♦:3-682-645-00	HOUSE, LAMP	
53	♦:1-611-071-00	FU-19 BOARD	
54	3-682-648-00	KNOB, TRACK CONTROL	
55	♦:1-611-073-00	VR-3 BOARD	
56	♦:1-611-070-00	TM-49 BOARD	
57	♦:3-682-650-00	HOUSE, INDICATION LAMP	
58	♦:1-611-069-00	TM-48 BOARD	
59	♦:1-611-068-00	TR-13 BOARD	
60	3-701-754-00	PLATE, INSULATING	
61	♦:A-6711-476-A	RF-14 BOARD, COMPLETE	62,63,64
62	♦:3-682-678-00	CASE (UPPER), SHIELD	
63	♦:3-682-680-00	CASE (MAIN), SHIELD, RF	
64	♦:3-682-679-00	CASE (LOWER), SHIELD, RF	
65	3-681-186-00	KNOB, TUNING	
66	3-682-681-11	COVER, PRESET	
67	♦:A-6721-191-A	TA-15 BOARD, COMPLETE	68,69,70,71,72 73,74,75,76,93
68	♦:3-662-383-00	BAND, RETAINER, TUNER	
69	⚠.1-463-350-00	TUNER (BT-881)	
70	♦:3-682-677-00	CASE (UPPER), SHIELD, AUDIO	
71	♦:3-682-624-00	CASE (MAIN), SHIELD, AUDIO	
72	♦:3-682-676-00	CASE (LOWER), SHIELD, AUDIO	
73	♦:3-655-214-00	CLIP, CABLE	
74	♦:3-682-622-00	CASE (LOWER), SHIELD, T	
75	♦:3-682-621-00	CASE (MAIN), SHIELD, T	
76	♦:3-682-620-00	CASE (UPPER), SHIELD, T	
77	3-670-155-00	LEG	
78	♦:4-342-117-00	CASE, SHIELD (MAIN), R	
79	♦:1-606-794-00	N BOARD	
80	♦:4-342-118-00	LID, SHIELD CASE, R	
81	♦:3-682-612-00	CLIP (B), ANCHOR	
82	♦:3-681-101-00	BRACKET (RIGHT), RBM	
83	⚠.1-464-289-00	BOOSTER MIXER, RF MODULATOR	
84	♦:3-682-613-00	CLIP (C), ANCHOR	
85	♦:A-6715-194-A	SD-3 BOARD, COMPLETE	
86	♦:A-6711-474-A	YR-1 BOARD, COMPLETE	
87	♦:A-6711-475-A	CL-7 BOARD, COMPLETE	88,89,90
88	♦:3-682-603-00	CASE (LOWER), SHIELD, CL	
89	♦:3-682-602-00	CASE (MAIN), SHIELD, CL	
90	♦:3-682-601-00	CASE (UPPER), SHIELD, CL	
91	♦:3-682-611-00	CLIP (A), ANCHOR	
92	♦:1-611-072-00	FU-20 BOARD	
93	♦:1-611-061-00	MT-6 BOARD	
94	♦:1-555-716-00	CABLE, PIN	
95	♦:A-6715-193-A	SS-20 BOARD, COMPLETE	73,96,97
96	♦:3-682-606-00	CASE (MAIN), SHIELD, SS	
97	♦:3-682-607-00	CASE (LOWER), SHIELD, SS	
98	4-308-030-11	WASHER, DOUBLE STICK TAPE	
99	4-309-378-00	WASHER	

3. FRONT LOADING ASSEMBLY

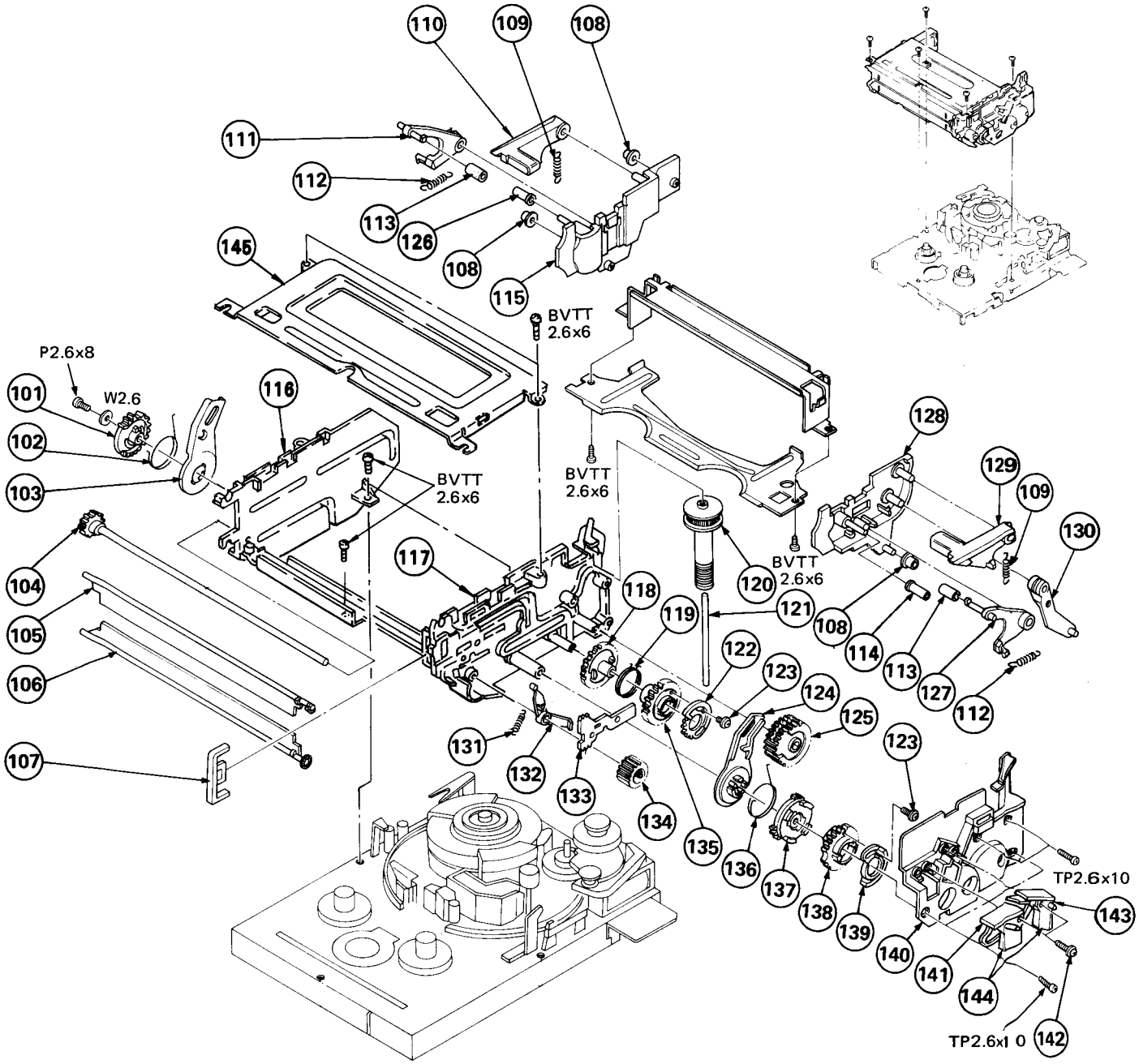

No.	Part No.	Description	Remark
101	3-679-226-00	GEAR (LEFT), ARM, DRIVING	
102	3-679-145-00	SPRING (LEFT)	
103	3-679-220-00	ARM (LEFT), DRIVING	
104	X-3679-105-0	SHAFT ASSY, GEAR, MIDWAY	
105	3-679-222-00	DOOR, UPPER	
106	X-3679-180-0	DOOR, ASSY LOWER	
107	3-679-137-00	HOLDER, OUTER DOOR	
108	3-679-143-00	ROLLER	
109	3-679-188-00	SPRING, TENSION	
110	3-679-132-00	LEVER (LEFT), PREVENTION	
111	3-679-130-00	LEVER (LEFT), RETAINER, CASSETTE	
112	3-679-288-00	SPRING, TENSION	
113	3-679-135-00	RUBBER, RETAINER, CASSETTE	
114	3-679-128-00	ROLLER (RIGHT), DRIVING	
115	♦:X-3679-107-0	PLATE ASSY, SIDE, BASE LEFT	
116	♦:3-679-266-00	PLATE, SIDE, LEFT	
117	♦:3-679-265-00	PLATE, SIDE, RIGHT	
118	3-679-217-04	GEAR (A), LIMITER	
119	3-679-139-00	SPRING	
120	3-679-215-00	GEAR, WORM	
121	3-679-123-00	SHAFT, GEAR, WORM	
122	3-679-124-00	CAM (CASSETTE OFF)	
123	3-669-480-21	+ PTPWH 2	
124	3-679-219-00	ARM (RIGHT), DRIVING	
125	3-679-216-00	WHEEL, WORM	
126	3-679-316-00	ROLLER (LEFT), DRIVING	
127	3-679-129-00	LEVER(RIGHT), RETAINER, CASSETTE	
128	♦:X-3679-106-0	PLATE ASSY, SIDE, BASE RIGHT	
129	3-679-131-00	LEVER (RIGHT), PREVENTION	
130	3-679-133-00	ARM, LID OPEN	
131	3-679-189-00	SPRING, TENSION	
132	3-679-134-00	ARM, SWITCHING, DOOR	
133	3-679-221-00	PLATE, RACK, SWITCHING, DOOR	
134	3-679-126-00	GEAR (RIGHT), MIDWAY	
135	3-679-218-00	GEAR (B), LIMITER	
136	3-679-144-00	SPRING (RIGHT)	
137	3-679-225-00	GEAR (RIGHT), ARM, DRIVING	
138	3-679-125-00	GEAR, DRIVING	
139	3-679-138-00	CAM (CASSETTE ON)	
140	♦:3-679-214-00	HOLDER, GEAR, WORM	
141	♦:1-609-227-00	CS-3 BOARD	
142	3-669-480-21	+ PTPWH 2	
143	♦:1-609-228-00	CS-4 BOARD	
144	1-554-241-00	SWITCH, LEVER	
145	♦:3-682-626-00	PLATE, TOP	

4. REEL TABLE ASSEMBLY

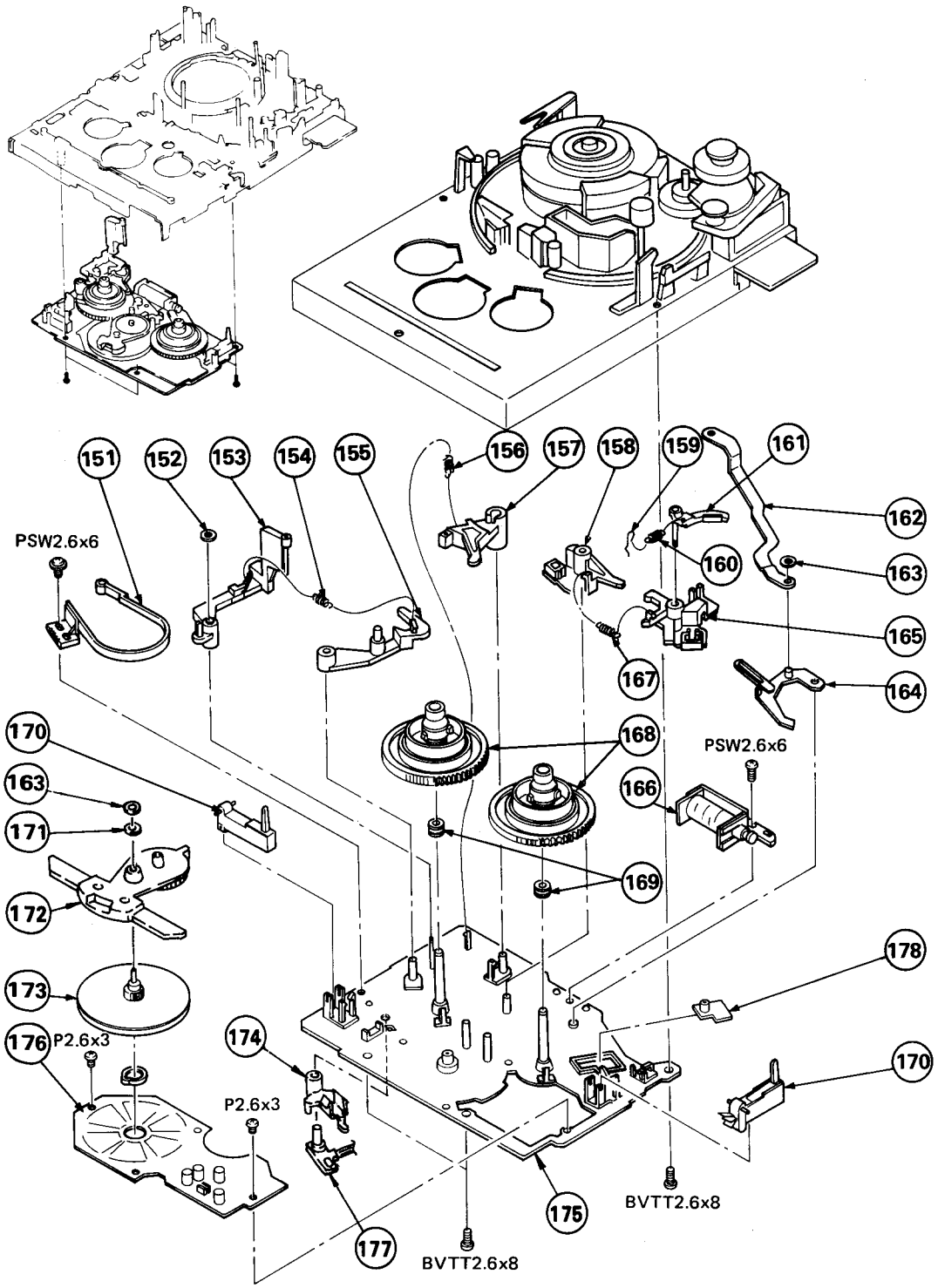

No.	Part No.	Description	Remark
151	X-3679-120-0	BAND ASSY, TENSION REGULATOR	
152	3-669-465-00	WASHER (1.5), STOPPER	
	♣: 3-679-231-00	LEVER, BRAKE, SOFT	
153	X-3679-122-0	LEVER ASSY, TENSION REGULATOR	
154	3-679-156-00	SPRING, TENSION	
155	♣: 3-679-230-00	LEVER, FUNCTION	
156	3-679-151-00	SPRING, TENSION	
158	X-3679-117-0	BRAKE ASSY, S	
159	♣: 3-681-163-00	HOOK, SPRING, REWIND	
160	3-681-156-00	SPRING, TENSION	
161	♣: X-3681-105-0	ARM ASSY, REWIND BRAKE	
162	♣: 3-679-168-00	JOINT, BRAKE, L	
163	3-669-595-00	WASHER (2), STOPPER	
164	X-3679-119-0	ARM ASSY, STOPPER, PENDULUM	

No.	Part No.	Description	Remark
165	X-3679-118-0	BRAKE ASSY, T	
166	1-454-348-00	SOLENOID, BRAKE PLUNGER	
167	3-679-190-00	SPRING, TENSION	
168	X-3681-104-0	TABLE ASSY, S REEL	
169	3-646-185-00	BEARING	
170	1-554-374-00	SWITCH, LEVER	
171	3-679-318-00	WASHER, PENDULUM ARM	
172	A-6759-074-A	ARM ASSY, PENDULUM	
173	X-2622-201-0	ROTOR ASSY, R	
174	♣: 3-681-157-00	HOLDER, RD	
175	♣: X-3679-130-0	CHASSIS ASSY, SUB	
176	♣: A-4910-021-A	R STATOR BOARD, COMPLETE	
177	♣: 1-610-401-00	RD-6 BOARD	
179	♣: 1-610-402-00	RD-7 BOARD	

5. CHASSIS ASSEMBLY (1)

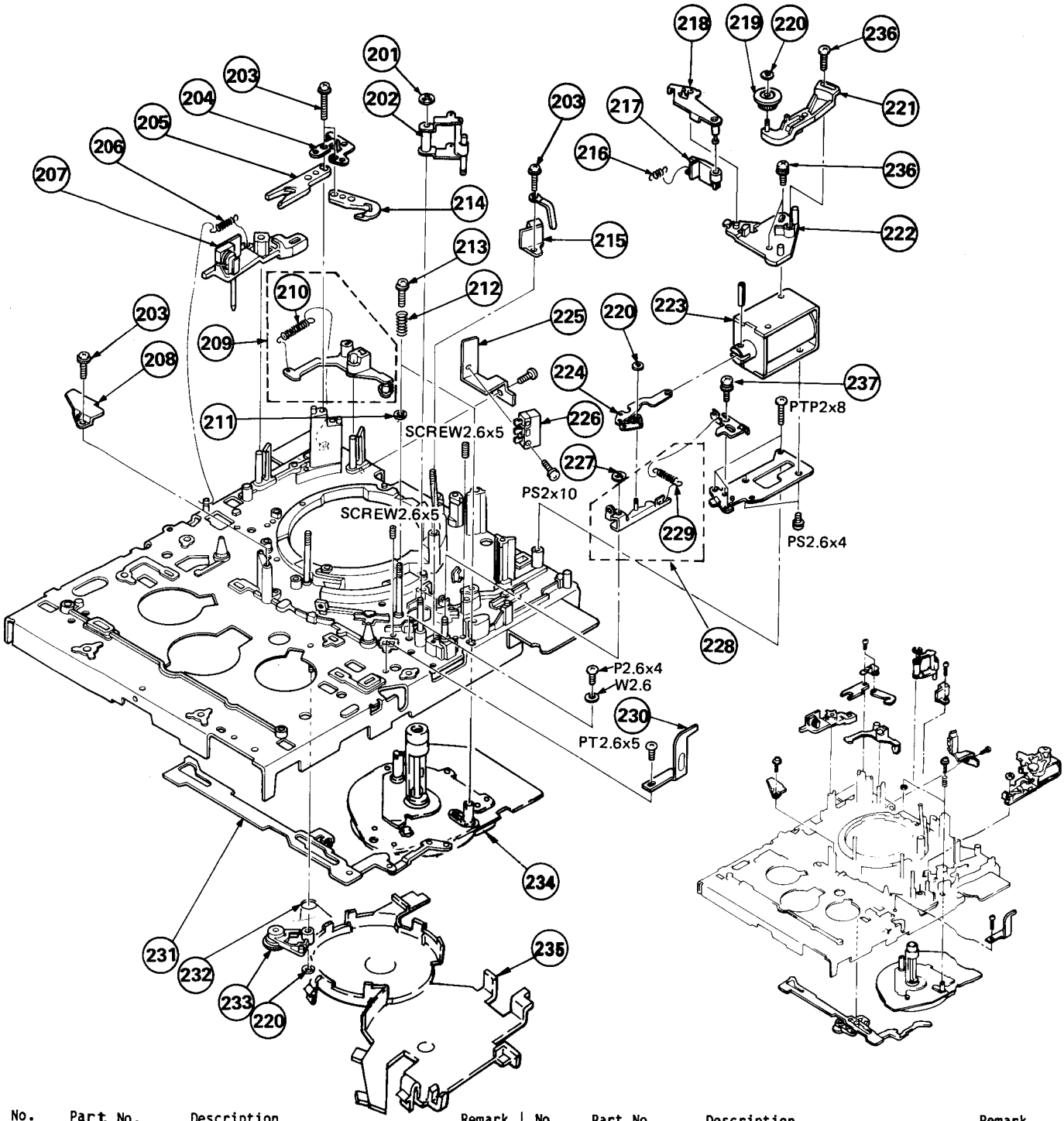

No.	Part No.	Description	Remark
201	3-669-596-00	WASHER (2.3), STOPPER	
202 ♦	X-3679-108-0	ARM ASSY, PRESS, PINCH	
203	3-669-480-11	+ PTPWH 2	
204 ♦	3-672-540-00	PLATE, GROUND, TAPE GUIDE	
205 ♦	3-669-618-00	PLATE (2), ADJUST	
206	3-679-164-00	SPRING, TENSION	
207	1-464-286-00	SENSOR, S COIL	
208 ♦	3-669-476-04	PLATE, GUIDE	
209	X-3679-149-0	ARM (B) ASSY, LOCK	210
210	3-679-323-00	SPRING, TENSION	
211	3-669-697-00	SPACER, CAPSTAN	
212	3-679-359-00	SPRING, COMPRESSION	
213	3-669-633-00	SCREW, + PW2	
214 ♦	3-672-507-00	PLATE (3-1), ADJUSTMENT	
215	1-464-250-00	SENSOR, T COIL	
216	3-508-108-XX	SPRING, TENSION	
217 ♦	3-679-251-00	LIMITER, STOPPER	
218 ♦	X-3679-123-0	ARM ASSY, STOPPER	
219	3-679-307-00	GEAR, TENSION	
220	3-669-465-00	WASHER (1.5), STOPPER	
221 ♦	X-3679-145-0	ARM ASSY, CAR, TENSION	
222 ♦	3-679-117-05	CHASSIS, ARM, STOPPER	
223	1-454-349-41	SOLENOID, PLUNGER	
224	X-3679-152-0	ARM (B) ASSY, PINCH SOLENOID	
225 ♦	3-672-542-00	BRACKET, SWITCH, LE	
226	1-553-539-00	SWITCH, MICRO	
227	3-669-595-00	WASHER (2), STOPPER	
228 ♦	X-3669-379-0	ARM (P) ASSY, PINCH LIMITER	229
229	3-465-159-XX	SPRING, TENSION	
230 ♦	3-679-163-00	PLATE, LID OPEN	
231	X-3681-106-0	LEVER ASSY, SLIDE	
232	3-681-154-00	SPRING, TORSION	
233	X-3681-107-0	ARM ASSY, REVIEW BRAKE	
234	8-838-027-00	MOTOR, DC (BHF-1901B)	
235 ♦	3-682-120-00	PROTECTOR	
236	3-669-607-00	+PSW (SMALL ROUND) 2.6	
237	3-669-607-31	+PSW (SMALL ROUND) (2.6)	

6. CHASSIS ASSEMBLY (2)

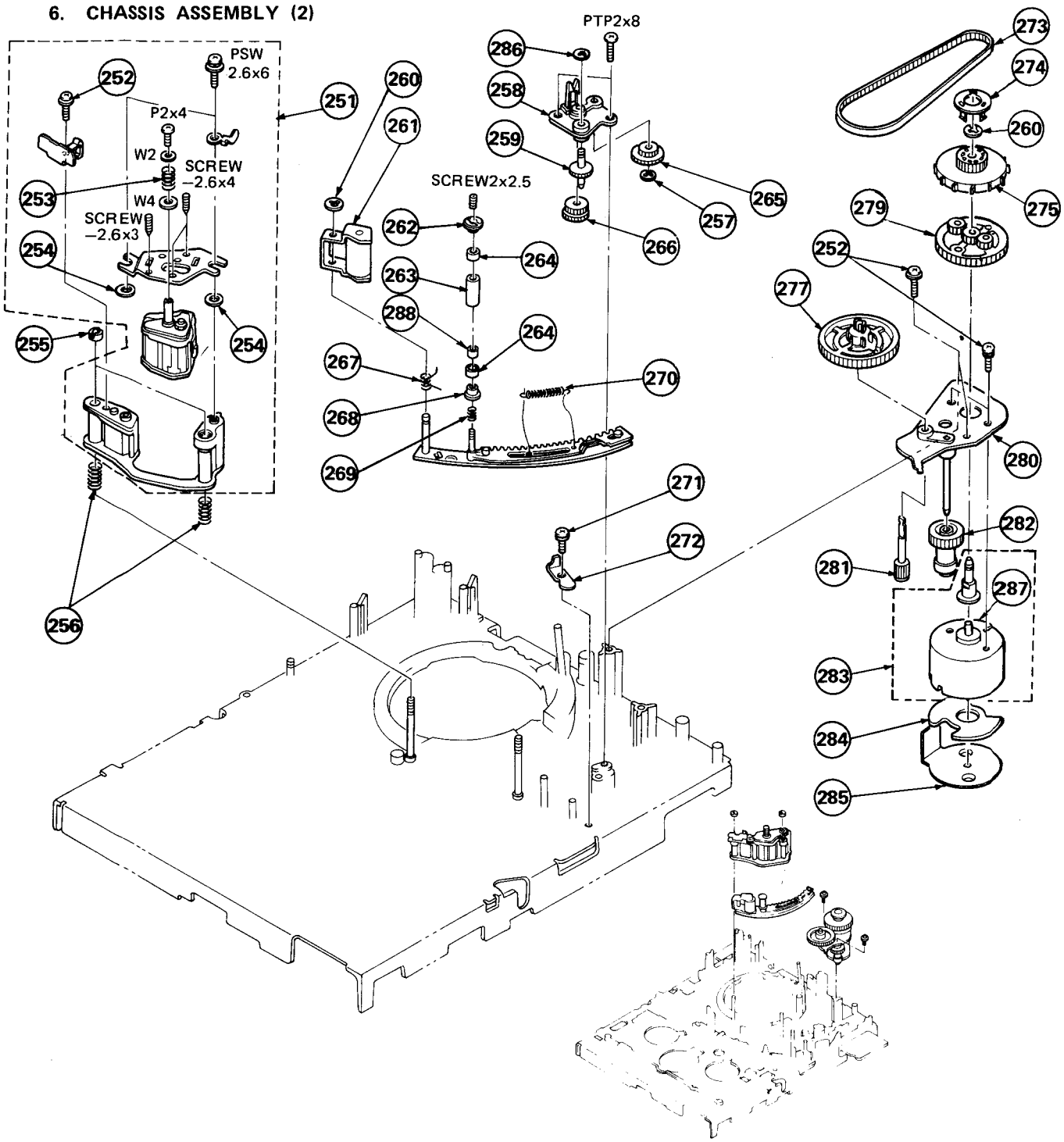

No.	Part No.	Description	Remark
251	A-6761-065-A	ACE ASSY	252,253,254
252	3-669-480-11	+ PTPWH 2	
253	♠:3-669-316-00	SPRING, COMPRESSION	
254	3-669-598-00	WASHER, CTL	
255	3-669-318-00	NUT, ADJUSTMENT, GUIDE	
256	3-669-317-00	SPRING, COMPRESSION	
257	3-669-465-00	WASHER (1.5), STOPPER	
258	X-3679-147-0	CHASSIS (B) ASSY, DRIVE GEAR	
259	X-3679-148-0	GEAR (F) ASSY (B)	
260	3-669-596-00	WASHER (2.3), STOPPER	
261	X-3669-307-6	ARM ASSY, PINCH ROLLER	
262	3-669-431-00	FLANGE (UPPER), GUIDE	
263	3-669-438-00	ROLLER, GUIDE	
264	3-669-443-00	BEARING, BALL (NO FLANGE)	
265	3-669-337-00	GEAR (D)	
266	3-669-338-00	GEAR (E)	
267	3-669-444-00	SPRING, TORSION	
268	3-669-432-00	FLANGE (LOWER), GUIDE	
269	3-669-452-00	SPRING, COMPRESSION	

No.	Part No.	Description	Remark
270	3-549-014-00	SPRING, TENSION	
271	3-669-607-31	+PSW (SMALL ROUND) (2.6)	
272	♠:3-679-165-00	STOPPER, SLIDER	
273	3-679-119-00	BELT, SYNCHRO	
274	3-679-140-00	FLANGE, GEAR, INTERNAL	
275	3-679-101-00	GEAR, INTERNAL	
276	3-679-104-00	GEAR	
277	3-679-115-00	GEAR (LARGE), LOADING	
279	X-3679-111-0	CARRIER ASSY	
280	♠:X-3679-112-0	CHASSIS ASSY, GEAR, PLANET	
281	3-679-114-00	GEAR (SMALL), LOADING	
282	X-3669-321-0	GEAR (C) ASSY	
283	A-6737-118-A	MOTOR ASSY, L	287
284	♠:1-605-071-00	LM-8 BOARD	
285	♠:3-669-613-00	INSULATOR, L MOTOR	
286	3-669-595-00	WASHER (2), STOPPER	
287	1-541-163-00	MOTOR	
288	3-657-841-31	SPACER (2X2.5)	

7. DRUM AND S LOADING ASSEMBLIES

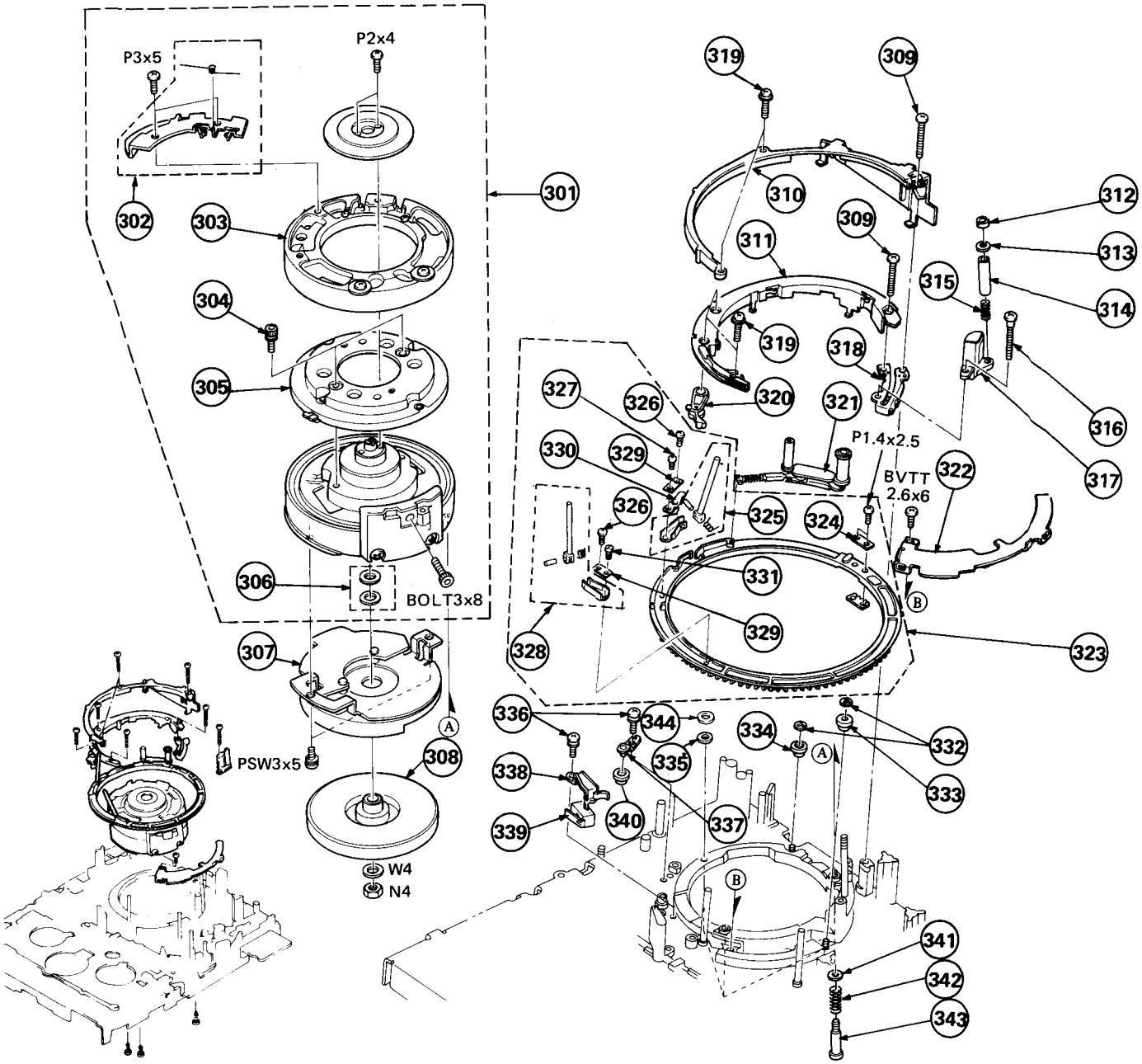

No.	Part No.	Description	Remark
301	A-6050-205-A	DRUM ASSY (DSH-39A-R)302,303,304,305,306	
302	A-6760-066-B	SPRING ASSY, TAPE RETAINER	
303	A-6760-138-A	DRUM ASSY, UPPER	
304	3-669-157-00	BOLT (WASHER) (2.6X8)	
305	A-6762-139-A	DISK ASSY	
306	X-3669-105-0	SPACER BLOCK ASSY	
307	X-2621-210-2	STATOR ASSY, D	
308	X-2621-202-0	ROTOR ASSY, D	
309	3-669-466-00	SCREW (M 2.6)	
310	♦:3-669-585-00	GUIDE (2), SHUTTLE	
311	♦:3-679-290-00	GUIDE (1-YA), SHUTTLE	
312	3-669-446-00	NUT, GUIDE, NO. 6	
313	3-679-910-00	FLANGE, GUIDE, NO. 6	
314	3-669-445-00	SPACER, GUIDE, NO. 6	
315	3-669-615-00	SPRING, COMPRESSION	
316	3-669-606-00	SCREW (2.6)	
317	8-8225-508-10	HEAD, FE	
318	♦:X-3669-313-0	BASE ASSY, SLANT	
319	3-669-480-11	+ PTPWH 2	
320	A-6750-108-B	SHUTTLE BLOCK ASSY, THREADING	
	X-3669-327-0	ARM ASSY, SWITCH, ULE	
322	♦:3-669-477-00	LINER, LINK, PIN	
323	X-3679-150-0	RING (YA) ASSY, S LOADING 324,325,326 327,328,329,330,331	
324	♦:3-669-616-00	RETAINER	
325	♦:X-3669-430-0	HOLDER BLOCK ASSY, #3 GUIDE	
326	3-669-478-00	SCREW (1X3), TAPPING	
327	3-669-479-11	SCREW (1.4X3.5), TAPPING	
328	♦:X-3669-429-0	HOLDER BLOCK ASSY, #2 GUIDE	
329	♦:3-669-472-00	RETAINER, SPRING, LEAF	
330	3-672-583-00	SPRING	
331	3-672-586-00	SCREW (1.4X3), TAPPING	
332	3-669-465-00	WASHER (1.5), STOPPER	
333	3-669-597-00	ROLLER (B), RING	
334	3-669-630-00	ROLLER (C), RING	
335	♦:3-669-646-11	SPACER, DRUM	
336	3-669-607-31	+PSW (SMALL ROUND) (2.6)	
337	♦:X-3669-329-0	PLATE ASSY, ADJUSTMENT	
338	♦:3-669-355-00	HOLDER, SWITCH, ULE	
339	1-553-718-00	SWITCH, MICRO	
340	3-669-360-00	ROLLER, RING	
341	3-669-600-11	WASHER, FLAT (3.5)	
342	3-429-123-00	SPRING	
343	3-669-302-00	SCREW, FITTING	
344	♦:3-669-646-00	SPACER, DRUM	

8. HARDWARE LIST

SCREW

7-621-759-35	+PSW, 2.6X5
7-621-759-45	+PSW, 2.6X6
7-621-259-32	SCREW +P 2.6X5
7-621-259-35	SCREW +P 2.6X5
7-627-551-08	SCREW, PRECISION +P 1.4X1.6
7-627-551-28	SCREW, PRECISION +P 1.4X2.5
7-628-253-45	SCREW +PS 2X10
7-628-253-95	SCREW +PS 2.6X4
7-628-254-15	SCREW +PS 2.6X6
7-685-134-01	SCREW +P 2.6X8 TYPE1
7-685-134-11	SCREW +P 2.6X8 TYPE2 NON-SLIT
7-685-135-11	SCREW +P 2.6X10 TYPE2 NON-SLIT
7-685-534-19	SCREW +BTP 2.6X8 TYPE2 N-S
7-685-791-01	SCREW +PTT 2.6X5 (S)
7-685-860-01	SCREW +BVTT 2.6X4 (S)
7-685-861-09	SCREW +BVTT 2.6X5 (S)
7-685-862-01	SCREW +BVTT 2.6X6 (S)

SET-SCREW

7-621-712-26	SET-SCREW, SLOT 2.6X3FLAT POINT
7-621-712-35	SET-SCREW, SLOT 2.6X4CONE POINT
7-621-712-46	SET-SCREW, SLOT 2.6X5FLAT POINT
7-621-731-08	SET-SCT, HEX. 2X2.5, FLAT POINT

SPRING PIN

7-626-302-31	SPRING PIN, 2.5X14

TAPPING

7-685-105-11	TPG +P 2X8, TYPE 2, NON-SLIT

NUT

7-622-205-05	N 2, TYPE 2

WASHER

7-688-002-11	W 2.6, MIDDLE
7-688-004-01	W 4, SMALL

SECTION 5
ELECTRICAL PARTS LIST

NOTE:

The components identified by shading and mark ⚠ are critical for safety. Replace only with part number specified.

• =>: Due to standardization, interchangeable replacements may be substituted for parts specified in the diagrams.

• Items marked " ♠ " are not stocked since they are seldom required for routine service. Some delay should be anticipated when ordering these items.

• All variable and adjustable resistors have characteristic curve B, unless otherwise noted.

CAPACITORS
• MF : μF, PF : μμF

RESISTORS
• All resistors are in ohms
• F : nonflammable

COILS
• MMH : mH, UH : μH

When indicating parts by reference number, please include the board name.

Ref.No.	Part No.	Description				Remark
	♠:A-4910-021-A	R STATOR BOARD, COMPLETE **********				
	♠:1-560-460-00	PIN, CONNECTOR 4P				
		CAPACITOR				
C1	1-123-821-41	ELECT	47MF	20%	16V	
C2	1-123-821-41	ELECT	47MF	20%	16V	
C3	1-123-821-41	ELECT	47MF	20%	16V	
C4	1-123-821-41	ELECT	47MF	20%	16V	
		DIODE				
D1	8-719-941-48	DIODE 1N4148TP				
		IC				
IC1	8-759-108-77	IC CX-877				
		TRANSISTOR				
Q1	8-729-100-01	TRANSISTOR 2SD992				
Q2	8-729-100-01	TRANSISTOR 2SD992				
Q3	8-729-100-01	TRANSISTOR 2SD992				
Q4	8-729-100-01	TRANSISTOR 2SD992				
Q5	8-729-100-01	TRANSISTOR 2SD992				
Q6	8-729-100-01	TRANSISTOR 2SD992				
		RESISTOR				
R1	1-247-823-00	CARBON	470	5%	1/6W	
R2	1-247-823-00	CARBON	470	5%	1/6W	
R3	1-247-823-00	CARBON	470	5%	1/6W	
R4	1-247-829-00	CARBON	820	5%	1/6W	
R5	1-247-871-00	CARBON	47K	5%	1/6W	
R6	1-247-871-00	CARBON	47K	5%	1/6W	
R7	1-247-871-00	CARBON	47K	5%	1/6W	
R8	1-247-871-00	CARBON	47K	5%	1/6W	
		DIODE				
S1	8-719-810-31	DIODE THS103-1				
S2	8-719-810-31	DIODE THS103-1				
**********						
	♠:A-6711-474-A	YR-1 BOARD, COMPLETE **********				
	♠:3-655-214-00	CLIP, CABLE				
	3-682-615-00	PANEL, REAR				
		CAPACITOR				
C001	1-161-032-00	CERAMIC	0.01MF	20%	25V	
C002	1-123-307-00	ELECT	100MF	20%	10V	
C003	1-102-951-00	CERAMIC	15PF	5%	50V	
C004	1-101-880-00	CERAMIC	47PF	5%	50V	
C005	1-102-951-00	CERAMIC	15PF	5%	50V	
C006	1-131-398-00	ELECT(SOLID)	0.22MF	10%	16V	
C007	1-123-356-00	ELECT	10MF	20%	16V	
C008	1-102-074-00	CERAMIC	0.001MF	10%	50V	
C009	1-161-032-00	CERAMIC	0.01MF	20%	25V	
C010	1-123-380-00	ELECT	1MF	20%	50V	
C011	1-123-356-00	ELECT	10MF	20%	16V	
C012	1-123-307-00	ELECT	100MF	20%	10V	
C013	1-102-951-00	CERAMIC	15PF	5%	50V	
C014	1-101-880-00	CERAMIC	47PF	5%	50V	
C015	1-102-951-00	CERAMIC	15PF	5%	50V	
C016	1-161-036-00	CERAMIC	0.047MF	20%	25V	
C017	1-123-296-00	ELECT	220MF	20%	6.3V	
C018	1-102-973-00	CERAMIC	100PF	5%	50V	
C019	1-102-973-00	CERAMIC	100PF	5%	50V	
C020	1-123-381-00	ELECT	2.2MF	20%	50V	
C021	1-161-036-00	CERAMIC	0.047MF	20%	25V	
C022	1-161-032-00	CERAMIC	0.01MF	20%	25V	
C023	1-123-306-00	ELECT	47MF	20%	10V	
C024	1-102-129-00	CERAMIC	0.01MF	10%	50V	
C025	1-102-125-00	CERAMIC	0.0047MF	10%	50V	
C026	1-161-063-00	CERAMIC	0.1MF	20%	25V	
C027	1-123-318-00	ELECT	33MF	20%	16V	
C028	1-161-036-00	CERAMIC	0.047MF	20%	25V	
C029	1-131-398-00	ELECT(SOLID)	0.22MF	10%	16V	
C032	1-123-307-00	ELECT	100MF	20%	10V	
C035	1-123-306-00	ELECT	47MF	20%	10V	
C036	1-123-306-00	ELECT	47MF	20%	10V	
C037	1-123-306-00	ELECT	47MF	20%	10V	
C039	1-161-036-00	CERAMIC	0.047MF	20%	25V	
C040	1-123-307-00	ELECT	100MF	20%	10V	
C041	1-123-306-00	ELECT	47MF	20%	10V	
C044	1-161-036-00	CERAMIC	0.047MF	20%	25V	
C045	1-123-306-00	ELECT	47MF	20%	10V	
C046	1-161-032-00	CERAMIC	0.01MF	20%	25V	
C047	1-161-032-00	CERAMIC	0.01MF	20%	25V	
C048	1-108-595-00	MYLAR	0.047MF	5%	50V	
C049	1-101-059-00	CERAMIC	510PF	5%	50V	
C050	1-102-074-00	CERAMIC	0.001MF	10%	50V	
C051	1-123-306-00	ELECT	47MF	20%	10V	
C052	1-123-306-00	ELECT	47MF	20%	10V	
C055	1-123-356-00	ELECT	10MF	20%	16V	
C056	1-102-973-00	CERAMIC	100PF	5%	50V	
C057	1-102-820-00	CERAMIC	330PF	5%	50V	
C058	1-123-354-00	ELECT	3.3MF	20%	50V	
C059	1-123-380-00	ELECT	1MF	20%	50V	
C060	1-123-356-00	ELECT	10MF	20%	16V	
C061	1-161-063-00	CERAMIC	0.1MF	20%	25V	
C062	1-101-882-00	CERAMIC	51PF	5%	50V	
C063	1-161-032-00	CERAMIC	0.01MF	20%	25V	
C064	1-161-036-00	CERAMIC	0.047MF	20%	25V	
C065	1-101-880-00	CERAMIC	47PF	5%	50V	
C066	1-161-032-00	CERAMIC	0.01MF	20%	25V	

YR-1

Ref.No.	Part No.	Description				Remark
C067	1-102-947-00	CERAMIC	10PF	5%	50V	
C068	1-123-306-00	ELECT	47MF	20%	10V	
C069	1-161-036-00	CERAMIC	0.047MF	20%	25V	
C070	1-161-032-00	CERAMIC	0.01MF	20%	25V	
C071	1-102-947-00	CERAMIC	10PF	5%	50V	
C075	1-101-361-00	CERAMIC	150PF	5%	50V	
C076	1-123-332-00	ELECT	47MF	20%	16V	
C077	1-161-036-00	CERAMIC	0.047MF	20%	25V	
C078	1-102-950-00	CERAMIC	13PF	5%	50V	
C079	1-101-882-00	CERAMIC	51PF	5%	50V	
C080	1-101-882-00	CERAMIC	51PF	5%	50V	
C081	1-102-950-00	CERAMIC	13PF	5%	50V	
C082	1-123-306-00	ELECT	47MF	20%	10V	
C083	1-102-978-00	CERAMIC	220PF	5%	50V	
C085	1-102-953-00	CERAMIC	18PF	5%	50V	
C086	1-102-820-00	CERAMIC	330PF	5%	50V	
C087	1-102-820-00	CERAMIC	330PF	5%	50V	
C088	1-102-981-00	CERAMIC	300PF	5%	50V	
C089	1-102-976-00	CERAMIC	180PF	5%	50V	
C091	1-102-981-00	CERAMIC	300PF	5%	50V	
C092	1-102-820-00	CERAMIC	330PF	5%	50V	
C093	1-102-978-00	CERAMIC	220PF	5%	50V	
C094	1-102-981-00	CERAMIC	300PF	5%	50V	
C095	1-101-880-00	CERAMIC	47PF	5%	50V	
C097	1-161-036-00	CERAMIC	0.047MF	20%	25V	
C098	1-123-307-00	ELECT	100MF	20%	10V	
C099	1-123-306-00	ELECT	47MF	20%	10V	
C100	1-123-656-00	ELECT	1000MF	20%	10V	
C101	1-123-656-00	ELECT	1000MF	20%	10V	
C102	1-123-306-00	ELECT	47MF	20%	10V	
C103	1-161-036-00	CERAMIC	0.047MF	20%	25V	
C104	1-123-306-00	ELECT	47MF	20%	10V	
C105	1-123-306-00	ELECT	47MF	20%	10V	
C109	1-123-307-00	ELECT	100MF	20%	10V	
C110	1-123-306-00	ELECT	47MF	20%	10V	
C111	1-161-036-00	CERAMIC	0.047MF	20%	25V	
C112	1-161-032-00	CERAMIC	0.01MF	20%	25V	
C113	1-161-063-00	CERAMIC	0.1MF	20%	25V	
C114	1-123-354-00	ELECT	3.3MF	20%	50V	
C115	1-123-381-00	ELECT	2.2MF	20%	50V	
C116	1-123-381-00	ELECT	2.2MF	20%	50V	
C118	1-123-306-00	ELECT	47MF	20%	10V	
C121	1-161-032-00	CERAMIC	0.01MF	20%	25V	
C122	1-123-381-00	ELECT	2.2MF	20%	50V	
C123	1-161-036-00	CERAMIC	0.047MF	20%	25V	
C124	1-161-036-00	CERAMIC	0.047MF	20%	25V	
C127	1-161-032-00	CERAMIC	0.01MF	20%	25V	
C128	1-161-032-00	CERAMIC	0.01MF	20%	25V	
C131	1-123-356-00	ELECT	10MF	20%	16V	
C132	1-161-063-00	CERAMIC	0.1MF	20%	25V	
C133	1-101-059-00	CERAMIC	510PF	5%	50V	
C134	1-108-595-00	MYLAR	0.047MF	5%	50V	
C135	1-101-059-00	CERAMIC	510PF	5%	50V	

Ref.No.	Part No.	Description				Remark
C136	1-161-036-00	CERAMIC	0.047MF	20%	25V	
C148	1-161-032-00	CERAMIC	0.01MF	20%	25V	
C149	1-101-880-00	CERAMIC	47PF	5%	50V	
C161	1-101-059-00	CERAMIC	510PF	5%	50V	
C162	1-102-821-00	CERAMIC	360PF	5%	50V	
C163	1-102-981-00	CERAMIC	300PF	5%	50V	
C164	1-102-976-00	CERAMIC	180PF	5%	50V	
C165	1-101-880-00	CERAMIC	47PF	5%	50V	
C166	1-161-036-00	CERAMIC	0.047MF	20%	25V	
C167	1-161-036-00	CERAMIC	0.047MF	20%	25V	
C168	1-123-306-00	ELECT	47MF	20%	10V	
C169	1-161-036-00	CERAMIC	0.047MF	20%	25V	
C170	1-161-032-00	CERAMIC	0.01MF	20%	25V	
C171	1-161-032-00	CERAMIC	0.01MF	20%	25V	
C172	1-161-032-00	CERAMIC	0.01MF	20%	25V	
C173	1-161-032-00	CERAMIC	0.01MF	20%	25V	
C174	1-161-032-00	CERAMIC	0.01MF	20%	25V	
C175	1-161-036-00	CERAMIC	0.047MF	20%	25V	
C176	1-161-036-00	CERAMIC	0.047MF	20%	25V	
C177	1-123-332-00	ELECT	47MF	20%	16V	
C178	1-161-032-00	CERAMIC	0.01MF	20%	25V	
C179	1-102-950-00	CERAMIC	13PF	5%	50V	
C180	1-101-882-00	CERAMIC	51PF	5%	50V	
C181	1-101-882-00	CERAMIC	51PF	5%	50V	
C182	1-102-950-00	CERAMIC	13PF	5%	50V	
C183	1-123-296-00	ELECT	220MF	20%	6.3V	
C184	1-123-296-00	ELECT	220MF	20%	6.3V	
C185	1-102-973-00	CERAMIC	100PF	5%	50V	
C186	1-161-017-00	CERAMIC	0.022MF	10%	25V	
C187	1-123-356-00	ELECT	10MF	20%	16V	
C188	1-102-816-00	CERAMIC	120PF	5%	50V	
C189	1-102-973-00	CERAMIC	100PF	5%	50V	
C190	1-123-380-00	ELECT	1MF	20%	50V	
C191	1-123-307-00	ELECT	100MF	20%	10V	
C192	1-102-122-00	CERAMIC	0.0027MF	10%	50V	
C193	1-102-117-00	CERAMIC	820PF	10%	50V	
C194	1-123-307-00	ELECT	100MF	20%	10V	
C195	1-102-951-00	CERAMIC	15PF	5%	50V	
C196	1-108-589-00	MYLAR	0.027MF	5%	50V	
C197	1-161-032-00	CERAMIC	0.01MF	20%	25V	
C200	1-161-063-00	CERAMIC	0.1MF	20%	25V	
C201	1-123-356-00	ELECT	10MF	20%	16V	
C202	1-161-036-00	CERAMIC	0.047MF	20%	25V	

CONNECTOR

CN002♣	1-560-891-00	PIN, CONNECTOR 3P
CN003♣	1-560-894-00	PIN, CONNECTOR 6P
CN004♣	1-560-892-00	PIN, CONNECTOR 4P
CN005♣	1-560-896-00	PIN, CONNECTOR 8P
CN006♣	1-560-896-00	PIN, CONNECTOR 8P
CN007♣	1-560-890-00	PIN, CONNECTOR 2P
CN008♣	1-560-891-00	PIN, CONNECTOR 3P
CN009♣	1-560-893-00	PIN, CONNECTOR 5P

When indicating parts by reference number, please include the board name.

Ref.No.	Part No.	Description	Remark
CN010♠	1-560-898-00	PIN, CONNECTOR 10P	
CN011♠	1-560-895-00	PIN, CONNECTOR 7P	
		JACK	
CNJ001	1-507-588-32	PIN JACK, 1P	
CNJ002	1-560-751-21	CONNECTOR ASSY, BNC	
CNJ003	1-561-468-00	SOCKET, CONNECTOR (DIN8P)	
		DIODE	
D001	=>8-719-200-02	DIODE 10E-2	
D002	=>8-719-200-02	DIODE 10E-2	
D005	8-719-811-48	DIODE 1SS148	
D006	8-719-811-48	DIODE 1SS148	
D007	8-719-811-48	DIODE 1SS148	
D008	8-719-811-48	DIODE 1SS148	
D009	8-719-811-48	DIODE 1SS148	
D010	8-719-811-48	DIODE 1SS148	
D020	8-719-811-48	DIODE 1SS148	
D021	8-719-811-48	DIODE 1SS148	
D022	8-719-811-48	DIODE 1SS148	
D023	8-719-811-48	DIODE 1SS148	
		DELAY LINE	
DL001	1-415-148-00	DELAY LINE	
DL004	1-415-204-00	DELAY LINE	
DL005	1-415-203-00	DELAY LINE	
		FILTER	
FL001	1-527-849-00	FILTER, CERAMIC	
FL002	1-235-097-00	FILTER, LOW PASS	
		IC	
IC001	8-759-201-00	IC TL8609P	
IC002	8-759-240-53	IC TC4053BP	
IC003	8-759-208-94	IC CX-894	
IC004	8-759-101-00	IC CX20043	
IC005	8-752-003-00	IC CX20039	
IC006	8-758-220-00	IC CX-822	
IC008	8-759-201-00	IC TA7357AP	
IC009	8-759-240-53	IC TC4053BP	
IC010	8-751-350-00	IC CX-135	
		COIL	
L001	1-408-416-00	MICRO INDUCTOR 39UH	
L002	1-408-416-00	MICRO INDUCTOR 39UH	
L003	1-408-416-00	MICRO INDUCTOR 39UH	
L004	1-408-416-00	MICRO INDUCTOR 39UH	
L005	1-408-408-00	MICRO INDUCTOR 8.2UH	
L008	1-408-427-00	MICRO INDUCTOR 330UH	
L009	1-408-422-00	MICRO INDUCTOR 120UH	
L010	1-408-424-00	MICRO INDUCTOR 180UH	
L011	1-408-422-00	MICRO INDUCTOR 120UH	
L012	1-408-413-00	MICRO INDUCTOR 22UH	
L013	1-408-419-00	MICRO INDUCTOR 68UH	
L014	1-408-412-00	MICRO INDUCTOR 18UH	
L015	1-408-423-00	MICRO INDUCTOR 150UH	
L017	1-408-419-00	MICRO INDUCTOR 68UH	
L020	1-408-414-00	MICRO INDUCTOR 27UH	
L022	1-408-410-00	MICRO INDUCTOR 12UH	
L023	1-408-423-00	MICRO INDUCTOR 150UH	
L024	1-408-412-00	MICRO INDUCTOR 18UH	
L025	1-408-412-00	MICRO INDUCTOR 18UH	
L026	1-408-423-00	MICRO INDUCTOR 150UH	
L027	1-408-422-00	MICRO INDUCTOR 120UH	
L028	1-408-424-00	MICRO INDUCTOR 180UH	
L029	1-408-422-00	MICRO INDUCTOR 120UH	
L031	1-408-423-00	MICRO INDUCTOR 150UH	
L032	1-407-703-00	MICRO INDUCTOR 68UH	
L033	1-407-703-00	MICRO INDUCTOR 68UH	
		TRANSISTOR	
Q001	=>8-729-603-50	TRANSISTOR 2SC403SP	
Q003	8-729-245-83	TRANSISTOR 2SC2458	
Q004	=>8-729-204-83	TRANSISTOR 2SA1048-GR	
Q005	=>8-729-603-50	TRANSISTOR 2SC403SP	
Q006	=>8-729-603-50	TRANSISTOR 2SC403SP	
Q007	=>8-729-603-50	TRANSISTOR 2SC403SP	
Q008	=>8-729-603-50	TRANSISTOR 2SC403SP	
Q009	=>8-729-204-83	TRANSISTOR 2SA1048-GR	
Q010	8-729-245-83	TRANSISTOR 2SC2458	
Q011	8-729-245-83	TRANSISTOR 2SC2458	
Q013	8-729-245-83	TRANSISTOR 2SC2458	
Q014	=>8-729-603-50	TRANSISTOR 2SC403SP	
Q015	=>8-729-603-50	TRANSISTOR 2SC403SP	
Q016	=>8-729-204-83	TRANSISTOR 2SA1048-GR	
Q017	=>8-729-603-50	TRANSISTOR 2SC403SP	
Q019	=>8-729-603-50	TRANSISTOR 2SC403SP	
Q022	=>8-729-603-50	TRANSISTOR 2SC403SP	
Q030	8-729-245-83	TRANSISTOR 2SC2458	
Q031	8-729-245-83	TRANSISTOR 2SC2458	
Q032	8-729-245-83	TRANSISTOR 2SC2458	
Q033	8-729-245-83	TRANSISTOR 2SC2458	
Q042	=>8-729-204-83	TRANSISTOR 2SA1048-GR	
Q043	=>8-729-603-50	TRANSISTOR 2SC403SP	
Q044	8-729-245-83	TRANSISTOR 2SC2458	
Q045	8-729-245-83	TRANSISTOR 2SC2458	
Q046	=>8-729-204-83	TRANSISTOR 2SA1048-GR	
Q047	=>8-729-603-50	TRANSISTOR 2SC403SP	
Q048	=>8-729-603-50	TRANSISTOR 2SC403SP	
Q049	=>8-729-204-83	TRANSISTOR 2SA1048-GR	
Q050	8-729-245-83	TRANSISTOR 2SC2458	
Q051	=>8-729-204-83	TRANSISTOR 2SA1048-GR	
Q054	8-729-245-83	TRANSISTOR 2SC2458	
Q055	8-729-245-83	TRANSISTOR 2SC2458	
Q056	8-729-245-83	TRANSISTOR 2SC2458	

When indicating parts by reference number, please include the board name.

Ref.No.	Part No.	Description				Remark
Q057	=>8-729-603-50	TRANSISTOR 2SC403SP				
Q058	=>8-729-603-50	TRANSISTOR 2SC403SP				
Q059	=>8-729-204-83	TRANSISTOR 2SA1048-GR				
Q060	=>8-729-603-50	TRANSISTOR 2SC403SP				
Q061	=>8-729-603-50	TRANSISTOR 2SC403SP				
Q062	=>8-729-204-83	TRANSISTOR 2SA1048-GR				
		RESISTOR				
R001	1-247-863-00	CARBON	22K	5%	1/6W	
R002	1-247-874-00	CARBON	62K	5%	1/6W	
R003	1-247-903-00	CARBON	1M	5%	1/6W	
R004	1-247-827-00	CARBON	680	5%	1/6W	
R005	1-247-832-00	CARBON	1.1K	5%	1/6W	
R006	1-247-903-00	CARBON	1M	5%	1/6W	
R007	1-247-827-00	CARBON	680	5%	1/6W	
R008	1-247-832-00	CARBON	1.1K	5%	1/6W	
R009	1-247-831-00	CARBON	1K	5%	1/6W	
R010	1-247-814-00	CARBON	200	5%	1/6W	
R012	1-247-814-00	CARBON	200	5%	1/6W	
R013	1-247-842-00	CARBON	3K	5%	1/6W	
R014	1-247-871-00	CARBON	47K	5%	1/6W	
R015	1-247-871-00	CARBON	47K	5%	1/6W	
R016	1-247-871-00	CARBON	47K	5%	1/6W	
R019	1-247-871-00	CARBON	47K	5%	1/6W	
R023	1-247-863-00	CARBON	22K	5%	1/6W	
R024	1-247-863-00	CARBON	22K	5%	1/6W	
R025	1-247-855-00	CARBON	10K	5%	1/6W	
R026	1-247-855-00	CARBON	10K	5%	1/6W	
R027	1-247-807-00	CARBON	100	5%	1/6W	
R028	1-247-855-00	CARBON	10K	5%	1/6W	
R029	1-247-859-00	CARBON	15K	5%	1/6W	
R030	1-247-895-00	CARBON	470K	5%	1/6W	
R031	1-247-857-00	CARBON	12K	5%	1/6W	
R032	1-247-861-00	CARBON	18K	5%	1/6W	
R033	1-247-831-00	CARBON	1K	5%	1/6W	
R034	1-247-861-00	CARBON	18K	5%	1/6W	
R035	1-247-847-00	CARBON	4.7K	5%	1/6W	
R036	1-247-831-00	CARBON	1K	5%	1/6W	
R037	1-247-839-00	CARBON	2.2K	5%	1/6W	
R038	1-247-875-00	CARBON	68K	5%	1/6W	
R039	1-247-883-00	CARBON	150K	5%	1/6W	
R040	1-247-839-00	CARBON	2.2K	5%	1/6W	
R041	1-247-835-00	CARBON	1.5K	5%	1/6W	
R042	1-247-843-00	CARBON	3.3K	5%	1/6W	
R043	1-247-852-00	CARBON	7.5K	5%	1/6W	
R044	1-247-835-00	CARBON	1.5K	5%	1/6W	
R048	1-247-837-00	CARBON	1.8K	5%	1/6W	
R049	1-247-827-00	CARBON	680	5%	1/6W	
R051	1-247-859-00	CARBON	15K	5%	1/6W	
R052	1-247-845-00	CARBON	3.9K	5%	1/6W	
R053	1-247-825-00	CARBON	560	5%	1/6W	
R054	1-247-825-00	CARBON	560	5%	1/6W	
R055	1-247-827-00	CARBON	680	5%	1/6W	

Ref.No.	Part No.	Description				Remark
R056	1-247-831-00	CARBON	1K	5%	1/6W	
R057	1-247-823-00	CARBON	470	5%	1/6W	
R058	1-247-838-00	CARBON	2K	5%	1/6W	
R059	1-247-855-00	CARBON	10K	5%	1/6W	
R060	1-247-863-00	CARBON	22K	5%	1/6W	
R062	1-247-837-00	CARBON	1.8K	5%	1/6W	
R063	1-247-836-00	CARBON	1.6K	5%	1/6W	
R064	1-247-817-00	CARBON	270	5%	1/6W	
R065	1-247-816-00	CARBON	240	5%	1/6W	
R066	1-247-825-00	CARBON	560	5%	1/6W	
R067	1-247-838-00	CARBON	2K	5%	1/6W	
R068	1-247-859-00	CARBON	15K	5%	1/6W	
R069	1-247-827-00	CARBON	680	5%	1/6W	
R070	1-247-859-00	CARBON	15K	5%	1/6W	
R071	1-247-863-00	CARBON	22K	5%	1/6W	
R072	1-247-855-00	CARBON	10K	5%	1/6W	
R073	1-247-829-00	CARBON	820	5%	1/6W	
R074	1-247-863-00	CARBON	22K	5%	1/6W	
R075	1-247-863-00	CARBON	22K	5%	1/6W	
R076	1-247-829-00	CARBON	820	5%	1/6W	
R077	1-247-833-00	CARBON	1.2K	5%	1/6W	
R078	1-247-835-00	CARBON	1.5K	5%	1/6W	
R079	1-247-843-00	CARBON	3.3K	5%	1/6W	
R080	1-247-863-00	CARBON	22K	5%	1/6W	
R081	1-247-855-00	CARBON	10K	5%	1/6W	
R084	1-247-855-00	CARBON	10K	5%	1/6W	
R085	1-247-863-00	CARBON	22K	5%	1/6W	
R086	1-247-838-00	CARBON	2K	5%	1/6W	
R087	1-247-811-00	CARBON	150	5%	1/6W	
R088	1-247-831-00	CARBON	1K	5%	1/6W	
R089	1-247-863-00	CARBON	22K	5%	1/6W	
R090	1-247-835-00	CARBON	1.5K	5%	1/6W	
R091	1-247-829-00	CARBON	820	5%	1/6W	
R092	1-247-835-00	CARBON	1.5K	5%	1/6W	
R093	1-247-835-00	CARBON	1.5K	5%	1/6W	
R094	1-247-839-00	CARBON	2.2K	5%	1/6W	
R095	1-247-836-00	CARBON	1.6K	5%	1/6W	
R096	1-247-819-00	CARBON	330	5%	1/6W	
R097	1-247-831-00	CARBON	1K	5%	1/6W	
R098	1-247-831-00	CARBON	1K	5%	1/6W	
R099	1-247-803-00	CARBON	68	5%	1/6W	
R100	1-247-803-00	CARBON	68	5%	1/6W	
R101	1-247-867-00	CARBON	33K	5%	1/6W	
R105	1-247-829-00	CARBON	820	5%	1/6W	
R106	1-247-831-00	CARBON	1K	5%	1/6W	
R107	1-247-839-00	CARBON	2.2K	5%	1/6W	
R108	1-247-849-00	CARBON	5.6K	5%	1/6W	
R109	1-247-839-00	CARBON	2.2K	5%	1/6W	
R112	1-247-871-00	CARBON	47K	5%	1/6W	
R113	1-247-873-00	CARBON	56K	5%	1/6W	
R114	1-247-869-00	CARBON	39K	5%	1/6W	

When indicating parts by reference number, please include the board name.

Ref.No.	Part No.	Description				Remark
R115	1-247-855-00	CARBON	10K	5%	1/6W	
R116	1-247-824-00	CARBON	510	5%	1/6W	
R117	1-247-873-00	CARBON	56K	5%	1/6W	
R118	1-247-873-00	CARBON	56K	5%	1/6W	
R119	1-247-868-00	CARBON	36K	5%	1/6W	
R120	1-247-819-00	CARBON	330	5%	1/6W	
R121	1-247-819-00	CARBON	330	5%	1/6W	
R122	1-247-884-00	CARBON	160K	5%	1/6W	
R123	1-247-903-00	CARBON	1M	5%	1/6W	
R124	1-247-841-00	CARBON	2.7K	5%	1/6W	
R128	1-247-882-00	CARBON	130K	5%	1/6W	
R129	1-247-895-00	CARBON	470K	5%	1/6W	
R130	1-247-857-00	CARBON	12K	5%	1/6W	
R131	1-247-877-00	CARBON	82K	5%	1/6W	
R134	1-247-831-00	CARBON	1K	5%	1/6W	
R135	1-247-828-00	CARBON	750	5%	1/6W	
R136	1-247-831-00	CARBON	1K	5%	1/6W	
R163	1-247-855-00	CARBON	10K	5%	1/6W	
R164	1-247-855-00	CARBON	10K	5%	1/6W	
R165	1-247-863-00	CARBON	22K	5%	1/6W	
R166	1-247-855-00	CARBON	10K	5%	1/6W	
R167	1-247-855-00	CARBON	10K	5%	1/6W	
R168	1-247-855-00	CARBON	10K	5%	1/6W	
R169	1-247-863-00	CARBON	22K	5%	1/6W	
R170	1-247-815-00	CARBON	220	5%	1/6W	
R173	1-247-831-00	CARBON	1K	5%	1/6W	
R175	1-247-847-00	CARBON	4.7K	5%	1/6W	
R176	1-247-837-00	CARBON	1.8K	5%	1/6W	
R177	1-247-855-00	CARBON	10K	5%	1/6W	
R179	1-247-845-00	CARBON	3.9K	5%	1/6W	
R216	1-247-841-00	CARBON	2.7K	5%	1/6W	
R217	1-247-842-00	CARBON	3K	5%	1/6W	
R218	1-247-840-00	CARBON	2.4K	5%	1/6W	
R219	1-247-842-00	CARBON	3K	5%	1/6W	
R220	1-247-812-00	CARBON	160	5%	1/6W	
R221	1-247-830-00	CARBON	910	5%	1/6W	
R222	1-247-807-00	CARBON	100	5%	1/6W	
R223	1-247-802-00	CARBON	62	5%	1/6W	
R224	1-247-835-00	CARBON	1.5K	5%	1/6W	
R225	1-247-842-00	CARBON	3K	5%	1/6W	
R226	1-247-855-00	CARBON	10K	5%	1/6W	
R227	1-247-837-00	CARBON	1.8K	5%	1/6W	
R228	1-247-832-00	CARBON	1.1K	5%	1/6W	
R229	1-247-812-00	CARBON	160	5%	1/6W	
R230	1-247-805-00	CARBON	82	5%	1/6W	
R231	1-247-821-00	CARBON	390	5%	1/6W	
R232	1-247-839-00	CARBON	2.2K	5%	1/6W	
R233	1-247-825-00	CARBON	560	5%	1/6W	
R234	1-247-819-00	CARBON	330	5%	1/6W	
R235	1-247-863-00	CARBON	22K	5%	1/6W	
R236	1-247-863-00	CARBON	22K	5%	1/6W	
R237	1-247-812-00	CARBON	160	5%	1/6W	
R238	1-247-855-00	CARBON	10K	5%	1/6W	
R239	1-247-831-00	CARBON	1K	5%	1/6W	
R240	1-247-824-00	CARBON	510	5%	1/6W	
R241	1-247-824-00	CARBON	510	5%	1/6W	
R242	1-247-838-00	CARBON	2K	5%	1/6W	
R243	1-247-855-00	CARBON	10K	5%	1/6W	
R247	1-247-867-00	CARBON	33K	5%	1/6W	
R248	1-247-855-00	CARBON	10K	5%	1/6W	
R249	1-247-847-00	CARBON	4.7K	5%	1/6W	
R250	1-247-855-00	CARBON	10K	5%	1/6W	
R251	1-247-849-00	CARBON	5.6K	5%	1/6W	
R252	1-247-867-00	CARBON	33K	5%	1/6W	
R253	1-247-855-00	CARBON	10K	5%	1/6W	
R254	1-247-855-00	CARBON	10K	5%	1/6W	
R255	1-247-807-00	CARBON	100	5%	1/6W	
R256	1-247-867-00	CARBON	33K	5%	1/6W	
R257	1-247-867-00	CARBON	33K	5%	1/6W	
R258	1-247-831-00	CARBON	1K	5%	1/6W	
R259	1-247-817-00	CARBON	270	5%	1/6W	
R260	1-247-817-00	CARBON	270	5%	1/6W	
R261	1-247-867-00	CARBON	33K	5%	1/6W	
R262	1-247-867-00	CARBON	33K	5%	1/6W	
R263	1-247-831-00	CARBON	1K	5%	1/6W	
R264	1-247-807-00	CARBON	100	5%	1/6W	
R265	1-247-807-00	CARBON	100	5%	1/6W	
R266	1-247-837-00	CARBON	1.8K	5%	1/6W	
R267	1-247-837-00	CARBON	1.8K	5%	1/6W	
R268	1-247-831-00	CARBON	1K	5%	1/6W	
R269	1-247-833-00	CARBON	1.2K	5%	1/6W	
R270	1-247-826-00	CARBON	620	5%	1/6W	
R271	1-247-845-00	CARBON	3.9K	5%	1/6W	
R272	1-247-849-00	CARBON	5.6K	5%	1/6W	
R273	1-247-838-00	CARBON	2K	5%	1/6W	
R274	1-247-854-00	CARBON	9.1K	5%	1/6W	
R275	1-247-858-00	CARBON	13K	5%	1/6W	
R276	1-247-831-00	CARBON	1K	5%	1/6W	
R277	1-247-879-00	CARBON	100K	5%	1/6W	
R278	1-247-823-00	CARBON	470	5%	1/6W	
R279	1-247-827-00	CARBON	680	5%	1/6W	
R280	1-247-799-00	CARBON	47	5%	1/6W	
R282	1-247-847-00	CARBON	4.7K	5%	1/6W	
R285	1-247-839-00	CARBON	2.2K	5%	1/6W	
R286	1-247-847-00	CARBON	4.7K	5%	1/6W	
R288	1-247-839-00	CARBON	2.2K	5%	1/6W	
R289	1-247-855-00	CARBON	10K	5%	1/6W	
R290	1-247-855-00	CARBON	10K	5%	1/6W	
R291	1-247-855-00	CARBON	10K	5%	1/6W	
R292	1-247-843-00	CARBON	3.3K	5%	1/6W	
R294	1-247-887-00	CARBON	220K	5%	1/6W	

VARIABLE RESISTOR

RV001	1-228-750-00	RES, ADJ, CARBON 47K
RV002	1-228-750-00	RES, ADJ, CARBON 47K
RV003	1-228-748-00	RES, ADJ, CARBON 10K
RV007	1-228-750-00	RES, ADJ, CARBON 47K

When indicating parts by reference number, please include the board name.

YR-1 CL-7

Ref.No.	Part No.	Description				Remark
RV008	1-228-753-00	RES, ADJ, CARBON 470K				
RV010	1-228-745-00	RES, ADJ, CARBON 1K				
RV011	1-228-745-00	RES, ADJ, CARBON 1K				
RV013	1-228-745-00	RES, ADJ, CARBON 1K				
RV014	1-228-750-00	RES, ADJ, CARBON 47K				
RV015	1-228-750-00	RES, ADJ, CARBON 47K				
RV016	1-228-994-00	RES, ADJ, METAL GLAZE 10K				
RV023	1-228-747-00	RES, ADJ, CARBON 4.7K				
RV024	1-228-745-00	RES, ADJ, CARBON 1K				
		THERMISTOR				
TH001	1-800-071-XX	TH DIRECT-HEATING DISK S-300				
	1-800-071-XX	THERMISTER, S-300				
**********						
♣	A-6711-475-A	CL-7 BOARD, COMPLETE				
		**********				
♣	3-655-214-00	CLIP, CABLE				
♣	3-682-601-00	CASE (UPPER), SHIELD, CL				
♣	3-682-602-00	CASE (MAIN), SHIELD, CL				
♣	3-682-603-00	CASE (LOWER), SHIELD, CL				
		CAPACITOR				
C001	1-161-013-00	CERAMIC	0.01MF	10%	25V	
C002	1-161-013-00	CERAMIC	0.01MF	10%	25V	
C003	1-123-356-00	ELECT	10MF	20%	16V	
C005	1-161-013-00	CERAMIC	0.01MF	10%	25V	
C006	1-161-013-00	CERAMIC	0.01MF	10%	25V	
C007	1-161-013-00	CERAMIC	0.01MF	10%	25V	
C008	1-102-649-00	CERAMIC	56PF	5%	50V	
C009	1-123-356-00	ELECT	10MF	20%	16V	
C010	1-161-021-00	CERAMIC	0.047MF	10%	25V	
C011	1-161-013-00	CERAMIC	0.01MF	10%	25V	
C012	1-161-013-00	CERAMIC	0.01MF	10%	25V	
C013	1-161-013-00	CERAMIC	0.01MF	10%	25V	
C014	1-161-013-00	CERAMIC	0.01MF	10%	25V	
C015	1-161-013-00	CERAMIC	0.01MF	10%	25V	
C016	1-161-021-00	CERAMIC	0.047MF	10%	25V	
C017	1-161-021-00	CERAMIC	0.047MF	10%	25V	
C018	1-102-973-00	CERAMIC	100PF	5%	50V	
C020	1-161-013-00	CERAMIC	0.01MF	10%	25V	
C021	1-161-013-00	CERAMIC	0.01MF	10%	25V	
C022	1-161-013-00	CERAMIC	0.01MF	10%	25V	
C023	1-161-013-00	CERAMIC	0.01MF	10%	25V	
C024	1-161-013-00	CERAMIC	0.01MF	10%	25V	
C025	1-123-356-00	ELECT	10MF	20%	16V	
C026	1-161-013-00	CERAMIC	0.01MF	10%	25V	
C028	1-161-013-00	CERAMIC	0.01MF	10%	25V	
C029	1-123-380-00	ELECT	1MF	20%	50V	
C030	1-102-947-00	CERAMIC	10PF	5%	50V	
C031	1-102-965-00	CERAMIC	39PF	5%	50V	
C032	1-123-356-00	ELECT	10MF	20%	16V	
C035	1-102-120-00	CERAMIC	0.0018MF	10%	50V	

Ref.No.	Part No.	Description				Remark
C036	1-102-119-00	CERAMIC	0.0015MF	10%	50V	
C037	1-161-013-00	CERAMIC	0.01MF	10%	25V	
C038	1-102-960-00	CERAMIC	24PF	5%	50V	
C039	1-123-354-00	ELECT	3.3MF	20%	50V	
C040	1-161-017-00	CERAMIC	0.022MF	10%	25V	
C041	1-123-332-00	ELECT	47MF	20%	16V	
C042	1-161-021-00	CERAMIC	0.047MF	10%	25V	
C043	1-102-963-00	CERAMIC	33PF	5%	50V	
C044	1-161-013-00	CERAMIC	0.01MF	10%	25V	
C047	♣:A-6711-475-A	COMPLETE PCB, CL-7				
C048	1-161-013-00	CERAMIC	0.01MF	10%	25V	
C049	1-161-013-00	CERAMIC	0.01MF	10%	25V	
C052	1-123-356-00	ELECT	10MF	20%	16V	
C053	1-161-021-00	CERAMIC	0.047MF	10%	25V	
C054	1-161-013-00	CERAMIC	0.01MF	10%	25V	
C055	1-161-013-00	CERAMIC	0.01MF	10%	25V	
C056	1-161-013-00	CERAMIC	0.01MF	10%	25V	
C057	1-123-328-00	ELECT	4.7MF	20%	25V	
C058	1-161-021-00	CERAMIC	0.047MF	10%	25V	
C059	1-123-356-00	ELECT	10MF	20%	16V	
C060	1-102-512-00	CERAMIC	16PF	5%	50V	
C061	1-102-512-00	CERAMIC	16PF	5%	50V	
C062	1-102-851-00	CERAMIC	15PF	5%	50V	
C063	1-102-851-00	CERAMIC	15PF	5%	50V	
C064	1-102-529-00	CERAMIC	100PF	5%	50V	
C065	1-102-529-00	CERAMIC	100PF	5%	50V	
C066	1-161-013-00	CERAMIC	0.01MF	10%	25V	
C069	1-161-013-00	CERAMIC	0.01MF	10%	25V	
C072	1-161-013-00	CERAMIC	0.01MF	10%	25V	
C073	1-161-013-00	CERAMIC	0.01MF	10%	25V	
C074	1-161-013-00	CERAMIC	0.01MF	10%	25V	
C075	1-161-013-00	CERAMIC	0.01MF	10%	25V	
C079	1-123-332-00	ELECT	47MF	20%	16V	
C080	1-123-332-00	ELECT	47MF	20%	16V	
C081	1-123-318-00	ELECT	33MF	20%	16V	
C082	1-161-039-00	CERAMIC	0.001MF	10%	25V	
C085	1-161-013-00	CERAMIC	0.01MF	10%	25V	
C086	1-161-021-00	CERAMIC	0.047MF	10%	25V	
C087	1-123-330-00	ELECT	22MF	20%	16V	
C088	1-131-341-00	TANTALUM	0.1MF	10%	35V	
C089	1-161-017-00	CERAMIC	0.022MF	10%	25V	
C090	1-123-332-00	ELECT	47MF	20%	16V	
C091	1-161-021-00	CERAMIC	0.047MF	10%	25V	
C092	1-161-009-00	CERAMIC	0.0047MF	10%	25V	
C093	1-123-380-00	ELECT	1MF	20%	50V	
C094	1-161-013-00	CERAMIC	0.01MF	10%	25V	
C095	1-161-039-00	CERAMIC	0.001MF	10%	25V	
C096	1-102-950-00	CERAMIC	13PF	5%	50V	
C097	1-123-354-00	ELECT	3.3MF	20%	50V	
C098	1-161-013-00	CERAMIC	0.01MF	10%	25V	
C099	1-161-013-00	CERAMIC	0.01MF	10%	25V	
C100	1-161-013-00	CERAMIC	0.01MF	10%	25V	
C101	1-161-013-00	CERAMIC	0.01MF	10%	25V	

When indicating parts by reference number, please include the board name.

Ref.No.	Part No.	Description			Remark
C102	1-123-356-00	ELECT	10MF	20%	16V
C103	1-123-356-00	ELECT	10MF	20%	16V
C104	1-161-013-00	CERAMIC	0.01MF	10%	25V
C105	1-102-978-00	CERAMIC	220PF	5%	50V
C106	1-123-379-00	ELECT	0.47MF	20%	50V
C107	1-161-013-00	CERAMIC	0.01MF	10%	25V
C108	1-161-013-00	CERAMIC	0.01MF	10%	25V
C109	1-161-013-00	CERAMIC	0.01MF	10%	25V
C110	1-161-013-00	CERAMIC	0.01MF	10%	25V
C111	1-161-013-00	CERAMIC	0.01MF	10%	25V
C112	1-123-356-00	ELECT	10MF	20%	16V
C113	1-161-021-00	CERAMIC	0.047MF	10%	25V
C114	1-161-013-00	CERAMIC	0.01MF	10%	25V
C115	1-161-013-00	CERAMIC	0.01MF	10%	25V
C116	1-161-013-00	CERAMIC	0.01MF	10%	25V
C117	1-102-883-00	CERAMIC	27PF	5%	50V
C118	1-161-013-00	CERAMIC	0.01MF	10%	25V
C119	1-102-649-00	CERAMIC	56PF	5%	50V
C120	1-161-021-00	CERAMIC	0.047MF	10%	25V
C121	1-123-380-00	ELECT	1MF	20%	50V
C122	1-161-021-00	CERAMIC	0.047MF	10%	25V
C123	1-102-522-00	CERAMIC	51PF	5%	50V
C124	1-101-361-00	CERAMIC	150PF	5%	50V
C125	1-161-013-00	CERAMIC	0.01MF	10%	25V
C126	1-161-013-00	CERAMIC	0.01MF	10%	25V
C128	1-161-013-00	CERAMIC	0.01MF	10%	25V
C129	1-102-522-00	CERAMIC	51PF	5%	50V
C130	1-101-059-00	CERAMIC	510PF	5%	50V
C131	1-161-013-00	CERAMIC	0.01MF	10%	25V
C132	1-161-013-00	CERAMIC	0.01MF	10%	25V
C133	1-161-013-00	CERAMIC	0.01MF	10%	25V
C135	1-123-354-00	ELECT	3.3MF	20%	50V
C136	1-108-557-00	MYLAR	0.0012MF	5%	50V
C137	1-161-039-00	CERAMIC	0.001MF	10%	25V
C138	1-161-007-00	CERAMIC	0.0033MF	10%	25V
C139	1-123-356-00	ELECT	10MF	20%	16V
C140	1-161-021-00	CERAMIC	0.047MF	10%	25V
C143	1-161-013-00	CERAMIC	0.01MF	10%	25V
C144	1-123-356-00	ELECT	10MF	20%	16V
C145	1-123-356-00	ELECT	10MF	20%	16V
C146	1-161-013-00	CERAMIC	0.01MF	10%	25V
C147	1-161-013-00	CERAMIC	0.01MF	10%	25V
C149	1-161-021-00	CERAMIC	0.047MF	10%	25V
C150	1-161-013-00	CERAMIC	0.01MF	10%	25V
C152	1-161-013-00	CERAMIC	0.01MF	10%	25V
C153	1-161-021-00	CERAMIC	0.047MF	10%	25V
C155	1-123-356-00	ELECT	10MF	20%	16V
C156	1-161-021-00	CERAMIC	0.047MF	10%	25V
C158	1-161-021-00	CERAMIC	0.047MF	10%	25V
C159	1-123-356-00	ELECT	10MF	20%	16V
C160	1-102-816-00	CERAMIC	120PF	5%	50V
C165	1-161-013-00	CERAMIC	0.01MF	10%	25V
C166	1-102-820-00	CERAMIC	330PF	5%	50V
C167	1-161-013-00	CERAMIC	0.01MF	10%	25V
C168	1-161-021-00	CERAMIC	0.047MF	10%	25V

FILTER

CF002	1-527-875-00	FILTER, CERAMIC
CF003	1-527-874-00	FILTER, CERAMIC
CF004	1-527-831-00	FILTER, CERAMIC
CF005	1-527-874-00	FILTER, CERAMIC
CF006	1-527-874-00	FILTER, CERAMIC

CONNECTOR

CN001♣	1-560-896-00	PIN, CONNECTOR 8P
CN002♣	1-560-892-00	PIN, CONNECTOR 4P
CN003♣	1-560-898-00	PIN, CONNECTOR 10P
CN004♣	1-560-891-00	PIN, CONNECTOR 3P
CN005♣	1-560-894-00	PIN, CONNECTOR 6P
CN006♣	1-560-891-00	PIN, CONNECTOR 3P

TRIMMER

CV001	1-141-275-00	CAP, TRIMMER
CV002	1-141-275-00	CAP, TRIMMER

DIODE

D003	8-719-911-19	DIODE 1SS119
D004	8-719-911-19	DIODE 1SS119
D005	8-719-911-19	DIODE 1SS119
D007	8-719-911-19	DIODE 1SS119
D008	8-719-911-19	DIODE 1SS119
D009	8-719-911-19	DIODE 1SS119
D017	8-719-911-19	DIODE 1SS119
D018	8-719-911-19	DIODE 1SS119

DELAY LINE

DL001	1-415-198-00	DELAY LINE (1H)
DL002	1-415-198-00	DELAY LINE (1H)
DL003	1-415-338-00	DELAY LINE (300NS)
DL005	1-415-338-00	DELAY LINE (300NS)
DL006	1-415-198-00	DELAY LINE (1H)

FILTER

FL001	1-235-281-00	ENCAPSULATED FILTER

IC

IC001	8-759-208-94	IC CX-894
IC002=>	8-752-006-10	IC CX20061
IC003	8-759-240-52	IC TC4052BP
IC004	8-759-608-82	IC CX-882
IC006	8-759-919-05	IC CX-7905A
IC007	8-759-208-94	IC CX-894
IC008	8-759-240-69	IC TC4069UBP
IC009	8-752-000-80	IC CX20008
IC011	8-759-600-08	IC CX-870A
IC012=>	8-758-691-00	IC CX-869A

When indicating parts by reference number, please include the board name.

CL-7

Ref.No.	Part No.	Description	Remark
IC013	8-759-208-94	IC CX-894	
IC014	8-759-240-53	IC TC4053BP	
IC017	8-759-240-13	IC TC4013BP	
IC018	8-759-201-68	IC CX10023	
IC019	=>8-752-006-10	IC CX20061	
IC021	=>8-752-006-10	IC CX20061	

COIL

Ref.No.	Part No.	Description	Remark
L001	1-408-407-00	MICRO INDUCTOR 6.8UH	
L002	1-408-408-00	MICRO INDUCTOR 8.2UH	
L003	1-408-410-00	MICRO INDUCTOR 12UH	
L004	1-408-429-00	MICRO INDUCTOR 470UH	
L005	1-408-429-00	MICRO INDUCTOR 470UH	
L006	1-407-197-00	MICRO INDUCTOR 1.8MMH	
L007	1-408-426-00	MICRO INDUCTOR 270UH	
L008	1-408-412-00	MICRO INDUCTOR 18UH	
L009	1-407-503-00	MICRO INDUCTOR 8.2MMH	
L010	1-408-429-00	MICRO INDUCTOR 470UH	
L011	1-408-418-00	MICRO INDUCTOR 56UH	
L012	1-407-197-00	MICRO INDUCTOR 1.8MMH	
L013	1-408-407-00	MICRO INDUCTOR 6.8UH	
L014	1-408-406-00	MICRO INDUCTOR 5.6UH	
L015	1-407-503-00	MICRO INDUCTOR 8.2MMH	
L016	1-408-416-00	MICRO INDUCTOR 39UH	

VARIABLE COIL

Ref.No.	Part No.	Description	Remark
LV001	1-408-513-00	COIL (VARIABLE)	
LV002	1-408-512-00	COIL (VARIABLE)	
LV003	1-408-513-00	COIL (VARIABLE)	

TRANSISTOR

Ref.No.	Part No.	Description	Remark
Q001	8-729-603-50	TRANSISTOR 2SC403SP	
Q002	8-729-603-50	TRANSISTOR 2SC403SP	
Q003	8-729-603-50	TRANSISTOR 2SC403SP	
Q004	8-729-603-50	TRANSISTOR 2SC403SP	
Q005	8-729-603-50	TRANSISTOR 2SC403SP	
Q006	=>8-729-245-83	TRANSISTOR 2SC2458	
Q007	8-729-603-50	TRANSISTOR 2SC403SP	
Q008	8-729-603-50	TRANSISTOR 2SC403SP	
Q009	8-729-603-50	TRANSISTOR 2SC403SP	
Q010	8-729-603-50	TRANSISTOR 2SC403SP	
Q011	8-729-603-50	TRANSISTOR 2SC403SP	
Q012	8-729-603-50	TRANSISTOR 2SC403SP	
Q014	8-729-603-50	TRANSISTOR 2SC403SP	
Q015	8-729-603-50	TRANSISTOR 2SC403SP	
Q016	8-729-603-50	TRANSISTOR 2SC403SP	
Q017	8-729-603-50	TRANSISTOR 2SC403SP	
Q018	8-729-603-50	TRANSISTOR 2SC403SP	
Q019	=>8-729-245-83	TRANSISTOR 2SC2458	
Q020	=>8-729-204-83	TRANSISTOR 2SA1048	
Q021	=>8-729-204-83	TRANSISTOR 2SA1048	
Q022	=>8-729-245-83	TRANSISTOR 2SC2458	
Q023	8-729-603-50	TRANSISTOR 2SC403SP	
Q024	=>8-729-245-83	TRANSISTOR 2SC2458	
Q025	8-729-603-50	TRANSISTOR 2SC403SP	
Q029	=>8-729-245-83	TRANSISTOR 2SC2458	
Q030	=>8-729-204-83	TRANSISTOR 2SA1048	
Q031	=>8-729-245-83	TRANSISTOR 2SC2458	
Q037	=>8-729-245-83	TRANSISTOR 2SC2458	
Q038	8-729-603-50	TRANSISTOR 2SC403SP	
Q039	=>8-729-204-83	TRANSISTOR 2SA1048	
Q040	8-729-603-50	TRANSISTOR 2SC403SP	
Q041	=>8-729-245-83	TRANSISTOR 2SC2458	
Q042	8-729-603-50	TRANSISTOR 2SC403SP	
Q043	8-729-603-50	TRANSISTOR 2SC403SP	
Q044	8-729-603-50	TRANSISTOR 2SC403SP	
Q046	=>8-729-245-83	TRANSISTOR 2SC2458	
Q047	=>8-729-245-83	TRANSISTOR 2SC2458	
Q048	=>8-729-245-83	TRANSISTOR 2SC2458	
Q049	=>8-729-204-83	TRANSISTOR 2SA1048	
Q049	=>8-729-204-83	TRANSISTOR 2SA1048	
Q050	=>8-729-204-83	TRANSISTOR 2SA1048	
Q051	=>8-729-245-83	TRANSISTOR 2SC2458	
Q052	8-729-603-50	TRANSISTOR 2SC403SP	
Q053	=>8-729-245-83	TRANSISTOR 2SC2458	
Q054	8-729-603-50	TRANSISTOR 2SC403SP	
Q055	8-729-603-50	TRANSISTOR 2SC403SP	
Q056	8-729-603-50	TRANSISTOR 2SC403SP	
Q058	8-729-603-50	TRANSISTOR 2SC403SP	
Q059	=>8-729-245-83	TRANSISTOR 2SC2458	

RESISTOR

Ref.No.	Part No.	Description				Remark
R001	1-247-875-00	CARBON	68K	5%	1/6W	
R002	1-247-865-00	CARBON	27K	5%	1/6W	
R003	1-247-832-00	CARBON	1.1K	5%	1/6W	
R004	1-247-845-00	CARBON	3.9K	5%	1/6W	
R005	1-247-834-00	CARBON	1.3K	5%	1/6W	
R006	1-247-873-00	CARBON	56K	5%	1/6W	
R007	1-247-855-00	CARBON	10K	5%	1/6W	
R008	1-247-831-00	CARBON	1K	5%	1/6W	
R009	1-247-831-00	CARBON	1K	5%	1/6W	
R010	1-247-831-00	CARBON	1K	5%	1/6W	
R011	1-247-831-00	CARBON	1K	5%	1/6W	
R012	1-247-873-00	CARBON	56K	5%	1/6W	
R013	1-247-868-00	CARBON	36K	5%	1/6W	
R014	1-247-841-00	CARBON	2.7K	5%	1/6W	
R015	1-247-824-00	CARBON	510	5%	1/6W	
R016	1-247-805-00	CARBON	82	5%	1/6W	
R017	1-247-790-00	CARBON	20	5%	1/6W	
R018	1-247-864-00	CARBON	24K	5%	1/6W	
R020	1-247-867-00	CARBON	33K	5%	1/6W	
R021	1-247-867-00	CARBON	33K	5%	1/6W	
R022	1-247-867-00	CARBON	33K	5%	1/6W	
R023	1-247-875-00	CARBON	68K	5%	1/6W	
R024	1-247-830-00	CARBON	910	5%	1/6W	

When indicating parts by reference number, please include the board name.

Ref.No.	Part No.	Description				Remark
R025	1-247-875-00	CARBON	68K	5%	1/6W	
R026	1-247-867-00	CARBON	33K	5%	1/6W	
R027	1-247-863-00	CARBON	22K	5%	1/6W	
R028	1-247-870-00	CARBON	43K	5%	1/6W	
R029	1-247-821-00	CARBON	390	5%	1/6W	
R030	1-247-821-00	CARBON	390	5%	1/6W	
R031	1-247-821-00	CARBON	390	5%	1/6W	
R032	1-247-863-00	CARBON	22K	5%	1/6W	
R033	1-247-847-00	CARBON	4.7K	5%	1/6W	
R034	1-247-839-00	CARBON	2.2K	5%	1/6W	
R035	1-247-821-00	CARBON	390	5%	1/6W	
R036	1-247-821-00	CARBON	390	5%	1/6W	
R037	1-247-821-00	CARBON	390	5%	1/6W	
R038	1-247-821-00	CARBON	390	5%	1/6W	
R039	1-247-821-00	CARBON	390	5%	1/6W	
R040	1-247-839-00	CARBON	2.2K	5%	1/6W	
R041	1-247-839-00	CARBON	2.2K	5%	1/6W	
R042	1-247-831-00	CARBON	1K	5%	1/6W	
R043	1-247-831-00	CARBON	1K	5%	1/6W	
R049	1-247-869-00	CARBON	39K	5%	1/6W	
R050	1-247-855-00	CARBON	10K	5%	1/6W	
R051	1-247-839-00	CARBON	2.2K	5%	1/6W	
R052	1-247-829-00	CARBON	820	5%	1/6W	
R053	1-247-839-00	CARBON	2.2K	5%	1/6W	
R054	1-247-847-00	CARBON	4.7K	5%	1/6W	
R055	1-247-867-00	CARBON	33K	5%	1/6W	
R056	1-247-867-00	CARBON	33K	5%	1/6W	
R057	1-247-871-00	CARBON	47K	5%	1/6W	
R058	1-247-855-00	CARBON	10K	5%	1/6W	
R059	1-247-821-00	CARBON	390	5%	1/6W	
R060	1-247-839-00	CARBON	2.2K	5%	1/6W	
R061	1-247-831-00	CARBON	1K	5%	1/6W	
R062	1-247-831-00	CARBON	1K	5%	1/6W	
R063	1-247-867-00	CARBON	33K	5%	1/6W	
R065	1-247-867-00	CARBON	33K	5%	1/6W	
R066	1-247-867-00	CARBON	33K	5%	1/6W	
R067	1-247-867-00	CARBON	33K	5%	1/6W	
R069	1-247-867-00	CARBON	33K	5%	1/6W	
R070	1-247-867-00	CARBON	33K	5%	1/6W	
R071	1-247-873-00	CARBON	56K	5%	1/6W	
R072	1-247-873-00	CARBON	56K	5%	1/6W	
R073	1-247-839-00	CARBON	2.2K	5%	1/6W	
R074	1-247-859-00	CARBON	15K	5%	1/6W	
R075	1-247-859-00	CARBON	15K	5%	1/6W	
R076	1-247-839-00	CARBON	2.2K	5%	1/6W	
R077	1-247-839-00	CARBON	2.2K	5%	1/6W	
R078	1-247-825-00	CARBON	560	5%	1/6W	
R079	1-247-855-00	CARBON	10K	5%	1/6W	
R080	1-247-851-00	CARBON	6.8K	5%	1/6W	
R081	1-247-860-00	CARBON	16K	5%	1/6W	
R082	1-247-842-00	CARBON	3K	5%	1/6W	
R083	1-247-862-00	CARBON	20K	5%	1/6W	
R084	1-247-844-00	CARBON	3.6K	5%	1/6W	
R085	1-247-867-00	CARBON	33K	5%	1/6W	
R086	1-247-842-00	CARBON	3K	5%	1/6W	
R087	1-247-840-00	CARBON	2.4K	5%	1/6W	
R088	1-247-831-00	CARBON	1K	5%	1/6W	
R091	1-247-831-00	CARBON	1K	5%	1/6W	
R092	1-247-879-00	CARBON	100K	5%	1/6W	
R093	1-247-879-00	CARBON	100K	5%	1/6W	
R094	1-247-867-00	CARBON	33K	5%	1/6W	
R095	1-247-867-00	CARBON	33K	5%	1/6W	
R096	1-247-855-00	CARBON	10K	5%	1/6W	
R097	1-247-867-00	CARBON	33K	5%	1/6W	
R098	1-247-864-00	CARBON	24K	5%	1/6W	
R100	1-247-867-00	CARBON	33K	5%	1/6W	
R101	1-247-895-00	CARBON	470K	5%	1/6W	
R102	1-247-895-00	CARBON	470K	5%	1/6W	
R103	1-247-831-00	CARBON	1K	5%	1/6W	
R104	1-247-879-00	CARBON	100K	5%	1/6W	
R105	1-247-831-00	CARBON	1K	5%	1/6W	
R106	1-247-873-00	CARBON	56K	5%	1/6W	
R107	1-247-871-00	CARBON	47K	5%	1/6W	
R108	1-247-873-00	CARBON	56K	5%	1/6W	
R109	1-247-873-00	CARBON	56K	5%	1/6W	
R110	1-247-873-00	CARBON	56K	5%	1/6W	
R111	1-247-875-00	CARBON	68K	5%	1/6W	
R112	1-247-862-00	CARBON	20K	5%	1/6W	
R113	1-247-843-00	CARBON	3.3K	5%	1/6W	
R114	1-247-847-00	CARBON	4.7K	5%	1/6W	
R116	1-247-849-00	CARBON	5.6K	5%	1/6W	
R117	1-247-807-00	CARBON	100	5%	1/6W	
R119	1-247-867-00	CARBON	33K	5%	1/6W	
R120	1-247-858-00	CARBON	13K	5%	1/6W	
R121	1-247-867-00	CARBON	33K	5%	1/6W	
R122	1-247-867-00	CARBON	33K	5%	1/6W	
R123	1-247-867-00	CARBON	33K	5%	1/6W	
R124	1-247-831-00	CARBON	1K	5%	1/6W	
R125	1-247-831-00	CARBON	1K	5%	1/6W	
R126	1-247-831-00	CARBON	1K	5%	1/6W	
R127	1-247-831-00	CARBON	1K	5%	1/6W	
R140	1-247-867-00	CARBON	33K	5%	1/6W	
R141	1-247-867-00	CARBON	33K	5%	1/6W	
R142	1-247-831-00	CARBON	1K	5%	1/6W	
R144	1-247-831-00	CARBON	1K	5%	1/6W	
R145	1-247-851-00	CARBON	6.8K	5%	1/6W	
R146	1-247-864-00	CARBON	24K	5%	1/6W	
R148	1-247-831-00	CARBON	1K	5%	1/6W	
R149	1-247-838-00	CARBON	2K	5%	1/6W	
R150	1-247-844-00	CARBON	3.6K	5%	1/6W	
R151	1-247-852-00	CARBON	7.5K	5%	1/6W	
R152	1-247-855-00	CARBON	10K	5%	1/6W	
R153	1-247-872-00	CARBON	51K	5%	1/6W	
R154	1-247-843-00	CARBON	3.3K	5%	1/6W	
R155	1-247-831-00	CARBON	1K	5%	1/6W	
R156	1-247-847-00	CARBON	4.7K	5%	1/6W	

When indicating parts by reference number, please include the board name.

CL-7

Ref.No.	Part No.	Description				Remark
R157	1-247-873-00	CARBON	56K	5%	1/6W	
R158	1-247-868-00	CARBON	36K	5%	1/6W	
R159	1-247-873-00	CARBON	56K	5%	1/6W	
R160	1-247-873-00	CARBON	56K	5%	1/6W	
R161	1-247-847-00	CARBON	4.7K	5%	1/6W	
R162	1-247-865-00	CARBON	27K	5%	1/6W	
R163	1-247-870-00	CARBON	43K	5%	1/6W	
R164	1-247-885-00	CARBON	180K	5%	1/6W	
R165	1-247-871-00	CARBON	47K	5%	1/6W	
R166	1-247-870-00	CARBON	43K	5%	1/6W	
R167	1-247-870-00	CARBON	43K	5%	1/6W	
R168	1-247-853-00	CARBON	8.2K	5%	1/6W	
R169	1-247-867-00	CARBON	33K	5%	1/6W	
R170	1-247-871-00	CARBON	47K	5%	1/6W	
R171	1-247-863-00	CARBON	22K	5%	1/6W	
R172	1-247-847-00	CARBON	4.7K	5%	1/6W	
R173	1-247-821-00	CARBON	390	5%	1/6W	
R174	1-247-816-00	CARBON	240	5%	1/6W	
R175	1-247-839-00	CARBON	2.2K	5%	1/6W	
R176	1-247-797-00	CARBON	39	5%	1/6W	
R177	1-247-839-00	CARBON	2.2K	5%	1/6W	
R178	1-247-871-00	CARBON	47K	5%	1/6W	
R179	1-247-871-00	CARBON	47K	5%	1/6W	
R180	1-247-855-00	CARBON	10K	5%	1/6W	
R181	1-247-836-00	CARBON	1.6K	5%	1/6W	
R182	1-247-817-00	CARBON	270	5%	1/6W	
R183	1-247-842-00	CARBON	3K	5%	1/6W	
R184	1-247-823-00	CARBON	470	5%	1/6W	
R185	1-247-817-00	CARBON	270	5%	1/6W	
R186	1-247-792-00	CARBON	0	5%	1/6W	
R187	1-247-871-00	CARBON	47K	5%	1/6W	
R188	1-247-871-00	CARBON	47K	5%	1/6W	
R189	1-247-871-00	CARBON	47K	5%	1/6W	
R195	1-247-843-00	CARBON	3.3K	5%	1/6W	
R196	1-247-858-00	CARBON	13K	5%	1/6W	
R197	1-247-815-00	CARBON	220	5%	1/6W	
R198	1-247-862-00	CARBON	20K	5%	1/6W	
R199	1-247-821-00	CARBON	390	5%	1/6W	
R201	1-247-821-00	CARBON	390	5%	1/6W	
R202	1-247-870-00	CARBON	43K	5%	1/6W	
R203	1-247-889-00	CARBON	270K	5%	1/6W	
R204	1-247-838-00	CARBON	2K	5%	1/6W	
R205	1-247-867-00	CARBON	33K	5%	1/6W	
R206	1-247-867-00	CARBON	33K	5%	1/6W	
R207	1-247-867-00	CARBON	33K	5%	1/6W	
R208	1-247-849-00	CARBON	5.6K	5%	1/6W	
R209	1-247-824-00	CARBON	510	5%	1/6W	
R210	1-247-824-00	CARBON	510	5%	1/6W	
R211	1-247-863-00	CARBON	22K	5%	1/6W	
R212	1-247-855-00	CARBON	10K	5%	1/6W	
R213	1-247-867-00	CARBON	33K	5%	1/6W	
R214	1-247-867-00	CARBON	33K	5%	1/6W	
R215	1-247-831-00	CARBON	1K	5%	1/6W	
R216	1-247-821-00	CARBON	390	5%	1/6W	
R217	1-247-867-00	CARBON	33K	5%	1/6W	
R218	1-247-867-00	CARBON	33K	5%	1/6W	
R219	1-247-852-00	CARBON	7.5K	5%	1/6W	
R220	1-247-844-00	CARBON	3.6K	5%	1/6W	
R221	1-247-824-00	CARBON	510	5%	1/6W	
R222	1-247-824-00	CARBON	510	5%	1/6W	
R223	1-247-804-00	CARBON	75	5%	1/6W	
R224	1-247-831-00	CARBON	1K	5%	1/6W	
R225	1-247-855-00	CARBON	10K	5%	1/6W	
R226	1-247-831-00	CARBON	1K	5%	1/6W	
R227	1-247-831-00	CARBON	1K	5%	1/6W	
R231	1-247-847-00	CARBON	4.7K	5%	1/6W	
R233	1-247-831-00	CARBON	1K	5%	1/6W	
R234	1-247-824-00	CARBON	510	5%	1/6W	
R235	1-247-824-00	CARBON	510	5%	1/6W	
R236	1-247-867-00	CARBON	33K	5%	1/6W	
R237	1-247-867-00	CARBON	33K	5%	1/6W	
R238	1-247-865-00	CARBON	27K	5%	1/6W	
R239	1-247-875-00	CARBON	68K	5%	1/6W	
R241	1-247-826-00	CARBON	620	5%	1/6W	
R243	1-247-845-00	CARBON	3.9K	5%	1/6W	
R244	1-247-845-00	CARBON	3.9K	5%	1/6W	
R247	1-247-836-00	CARBON	1.6K	5%	1/6W	
R249	1-247-847-00	CARBON	4.7K	5%	1/6W	
R250	1-247-859-00	CARBON	15K	5%	1/6W	
R251	1-247-873-00	CARBON	56K	5%	1/6W	
R252	1-247-863-00	CARBON	22K	5%	1/6W	
R254	1-247-862-00	CARBON	20K	5%	1/6W	

VARIABLE RESISTOR

RV001	1-228-744-00	RES, ADJ, CARBON 470
RV002	1-228-744-00	RES, ADJ, CARBON 470
RV003	1-228-746-00	RES, ADJ, CARBON 2.2K
RV004	1-228-749-00	RES, ADJ, CARBON 22K
RV005	1-228-748-00	RES, ADJ, CARBON 10K
RV006	1-228-746-00	RES, ADJ, CARBON 2.2K
RV007	1-228-749-00	RES, ADJ, CARBON 22K
RV008	1-228-750-00	RES, ADJ, CARBON 47K
RV009	1-228-748-00	RES, ADJ, CARBON 10K
RV010	1-228-746-00	RES, ADJ, CARBON 2.2K

TRANSFORMER

T001	1-426-062-00	COIL (BPT)

CRYSTAL

X001	1-527-345-00	CRYSTAL, OSC
X002	1-527-396-00	CRYSTAL, OSC
X003	1-527-382-00	CRYSTAL, OSC

When indicating parts by reference number, please include the board name.

Ref.No.	Part No.	Description				Remark
♠	A-6711-476-A	RF-14 BOARD, COMPLETE **********				
♠	3-682-678-00	CASE (UPPER), SHIELD, RF				
♠	3-682-679-00	CASE (LOWER), SHIELD, RF				
♠	3-682-680-00	CASE (MAIN), SHIELD, RF				
		CAPACITOR				
C501	1-161-036-00	CERAMIC	0.047MF	20%	25V	
C502	1-123-330-00	ELECT	22MF	20%	16V	
C503	1-161-036-00	CERAMIC	0.047MF	20%	25V	
C504	1-161-036-00	CERAMIC	0.047MF	20%	25V	
C505	1-161-036-00	CERAMIC	0.047MF	20%	25V	
C506	1-123-305-00	ELECT	33MF	20%	10V	
C510	1-161-036-00	CERAMIC	0.047MF	20%	25V	
C511	1-161-036-00	CERAMIC	0.047MF	20%	25V	
C512	1-101-882-00	CERAMIC	51PF	5%	50V	
C513	1-101-882-00	CERAMIC	51PF	5%	50V	
C514	1-123-381-00	ELECT	2.2MF	20%	50V	
C515	1-161-009-00	CERAMIC	0.0047MF	10%	25V	
C516	1-161-017-00	CERAMIC	0.022MF	10%	25V	
C517	1-123-356-00	ELECT	10MF	20%	16V	
C518	1-102-114-00	CERAMIC	470PF	10%	50V	
C519	1-102-973-00	CERAMIC	100PF	5%	50V	
C520	1-161-032-00	CERAMIC	0.01MF	20%	25V	
C521	1-123-356-00	ELECT	10MF	20%	16V	
C522	1-102-112-00	CERAMIC	330PF	10%	50V	
C523	1-161-017-00	CERAMIC	0.022MF	10%	25V	
C524	1-161-032-00	CERAMIC	0.01MF	20%	25V	
C525	1-161-017-00	CERAMIC	0.022MF	10%	25V	
C526	1-161-019-00	CERAMIC	0.033MF	10%	25V	
C527	1-161-063-00	CERAMIC	0.1MF	20%	25V	
C528	1-161-036-00	CERAMIC	0.047MF	20%	25V	
C529	1-123-380-00	ELECT	1MF	20%	50V	
C531	1-123-333-00	ELECT	100MF	20%	16V	
C532	1-123-380-00	ELECT	1MF	20%	50V	
C533	1-102-947-00	CERAMIC	10PF	5%	50V	
C534	1-102-953-00	CERAMIC	18PF	5%	50V	
C536	1-102-951-00	CERAMIC	15PF	5%	50V	
C537	1-102-953-00	CERAMIC	18PF	5%	50V	
C538	1-161-036-00	CERAMIC	0.047MF	20%	25V	
C539	1-161-032-00	CERAMIC	0.01MF	20%	25V	
C542	1-161-032-00	CERAMIC	0.01MF	20%	25V	
C543	1-123-332-00	ELECT	47MF	20%	16V	
C544	1-123-332-00	ELECT	47MF	20%	16V	
C545	1-161-032-00	CERAMIC	0.01MF	20%	25V	
C546	1-131-500-51	TANTALUM	2.2MF	20%	16V	
		CONNECTOR				
CN501♠	1-508-845-00	PIN, CONNECTOR 6P				
CN502♠	1-564-031-11	PIN, CONNECTOR 6P				
CN503♠	1-508-846-00	PIN, CONNECTOR 8P				
CN504♠	1-508-744-00	PIN, CONNECTOR 10P				
CN505♠	1-564-027-00	PIN, CONNECTOR 2P				

Ref.No.	Part No.	Description				Remark
		DIODE				
D501	8-719-911-19	DIODE 1SS119				
		IC				
IC501	8-758-620-00	IC CX-862				
IC503	8-751-340-10	IC CX-134A				
		COIL				
L501	1-408-421-00	MICRO INDUCTOR 100UH				
L502	1-408-024-00	MICRO INDUCTOR 0.22UH				
L504	1-408-024-00	MICRO INDUCTOR 0.22UH				
L505	1-408-158-00	MICRO INDUCTOR 6.8MMH				
L506	1-408-411-00	MICRO INDUCTOR 15UH				
L507	1-408-158-00	MICRO INDUCTOR 6.8MMH				
L508	1-408-411-00	MICRO INDUCTOR 15UH				
L509	1-408-422-00	MICRO INDUCTOR 120UH				
L510	1-408-427-00	MICRO INDUCTOR 330UH				
L511	1-408-427-00	MICRO INDUCTOR 330UH				
L512	1-408-421-00	MICRO INDUCTOR 100UH				
L513	1-407-717-00	MICRO INDUCTOR 1MMH				
		TRANSISTOR				
Q501	8-729-245-83	TRANSISTOR 2SC2458				
Q502	=>8-729-204-83	TRANSISTOR 2SA1048-GR				
Q503	8-729-245-83	TRANSISTOR 2SC2458				
Q505	8-729-245-83	TRANSISTOR 2SC2458				
Q506	=>8-729-205-02	TRANSISTOR 2SA1150				
Q507	8-729-245-83	TRANSISTOR 2SC2458				
Q508	8-729-245-83	TRANSISTOR 2SC2458				
Q509	=>8-729-603-50	TRANSISTOR 2SC403SP				
		RESISTOR				
R501	1-247-863-00	CARBON	22K	5%	1/6W	
R502	1-247-855-00	CARBON	10K	5%	1/6W	
R503	1-247-844-00	CARBON	3.6K	5%	1/6W	
R504	1-247-852-00	CARBON	7.5K	5%	1/6W	
R505	1-247-855-00	CARBON	10K	5%	1/6W	
R506	1-247-844-00	CARBON	3.6K	5%	1/6W	
R507	1-247-867-00	CARBON	33K	5%	1/6W	
R515	1-247-831-00	CARBON	1K	5%	1/6W	
R517	1-247-829-00	CARBON	820	5%	1/6W	
R518	1-247-829-00	CARBON	820	5%	1/6W	
R519	1-247-779-00	CARBON	6.8	5%	1/6W	
R520	1-247-822-00	CARBON	430	5%	1/6W	
R521	1-247-855-00	CARBON	10K	5%	1/6W	
R522 ⚠	1-247-028-11	CARBON	8.2	5%	1/8W	F
R523	1-247-839-00	CARBON	2.2K	5%	1/6W	
R524	1-247-839-00	CARBON	2.2K	5%	1/6W	
R525	1-247-839-00	CARBON	2.2K	5%	1/6W	
R526	1-247-839-00	CARBON	2.2K	5%	1/6W	
R527	1-247-831-00	CARBON	1K	5%	1/6W	
R528	1-247-831-00	CARBON	1K	5%	1/6W	

The components identified by shading and mark ⚠ are critical for safety. Replace only with part number specified.

When indicating parts by reference number, please include the board name.

RF-14 SS-20

Ref.No.	Part No.	Description				Remark
R529	1-247-825-00	CARBON	560	5%	1/6W	
R530	1-247-833-00	CARBON	1.2K	5%	1/6W	
R531 ⚠	1-247-028-11	CARBON	8.2	5%	1/8W	F
R532	1-247-807-00	CARBON	100	5%	1/6W	
R533	1-247-867-00	CARBON	33K	5%	1/6W	
R534	1-247-847-00	CARBON	4.7K	5%	1/6W	
R535	1-247-809-00	CARBON	120	5%	1/6W	
R536	1-247-839-00	CARBON	2.2K	5%	1/6W	
R537	1-247-849-00	CARBON	5.6K	5%	1/6W	
R538	1-247-826-00	CARBON	620	5%	1/6W	
R539	1-247-831-00	CARBON	1K	5%	1/6W	
R540	1-247-819-00	CARBON	330	5%	1/6W	
R541	1-247-783-00	CARBON	10	5%	1/6W	
R542	1-247-855-00	CARBON	10K	5%	1/6W	
R543	1-247-819-00	CARBON	330	5%	1/6W	
R544	1-247-783-00	CARBON	10	5%	1/6W	
R545	1-247-844-00	CARBON	3.6K	5%	1/6W	
R546	1-247-844-00	CARBON	3.6K	5%	1/6W	
R547	1-247-828-00	CARBON	750	5%	1/6W	
R548	1-247-807-00	CARBON	100	5%	1/6W	
R549	1-247-837-00	CARBON	1.8K	5%	1/6W	
R550	1-247-837-00	CARBON	1.8K	5%	1/6W	
R551	1-247-835-00	CARBON	1.5K	5%	1/6W	
R552	1-247-835-00	CARBON	1.5K	5%	1/6W	
R553	1-247-837-00	CARBON	1.8K	5%	1/6W	
R554	1-247-847-00	CARBON	4.7K	5%	1/6W	
R555	1-247-847-00	CARBON	4.7K	5%	1/6W	
R556	1-247-843-00	CARBON	3.3K	5%	1/6W	
R557	1-247-815-00	CARBON	220	5%	1/6W	
R558	1-247-828-00	CARBON	750	5%	1/6W	

VARIABLE RESISTOR

RV501	1-228-920-00	RES, ADJ, CARBON 2.2K
RV502	1-228-920-00	RES, ADJ, CARBON 2.2K
RV503	1-228-920-00	RES, ADJ, CARBON 2.2K
RV504	1-228-919-00	RES, ADJ, CARBON 1K
RV505	1-228-921-00	RES, ADJ, CARBON 4.7K

****

♠ : A-6715-193-A SS-20 BOARD, COMPLETE
****

♠ : 3-655-214-00 CLIP, CABLE
♠ : 3-682-606-00 CASE (MAIN), SHIELD, SS
♠ : 3-682-607-00 CASE (LOWER), SHIELD, SS

CAPACITOR

C001	1-161-021-00	CERAMIC	0.047MF	10%	25V
C002	1-102-517-00	CERAMIC	30PF	5%	50V
C003	1-102-517-00	CERAMIC	30PF	5%	50V
C004	1-123-380-00	ELECT	1MF	20%	50V
C005	1-161-013-00	CERAMIC	0.01MF	10%	25V
C006	1-123-306-00	ELECT	47MF	20%	10V
C007	1-123-318-00	ELECT	33MF	20%	16V
C008	1-123-318-00	ELECT	33MF	20%	16V
C009	1-130-491-00	MYLAR	0.047MF	5%	50V
C010	1-161-021-00	CERAMIC	0.047MF	10%	25V
C012	1-123-380-00	ELECT	1MF	20%	50V
C013	1-123-380-00	ELECT	1MF	20%	50V
C014	1-123-356-00	ELECT	10MF	20%	16V
C015	1-129-794-00	FILM	0.0033MF	5%	100V
C016	1-129-794-00	FILM	0.0033MF	5%	100V
C017	1-123-318-00	ELECT	33MF	20%	16V
C018	1-130-491-00	MYLAR	0.047MF	5%	50V
C019	1-161-021-00	CERAMIC	0.047MF	10%	25V
C020	1-123-333-00	ELECT	100MF	20%	16V
C501	1-123-318-00	ELECT	33MF	20%	16V
C502	1-123-356-00	ELECT	10MF	20%	16V
C503	1-130-620-00	MYLAR	0.01MF	10%	50V
C504	1-130-620-00	MYLAR	0.01MF	10%	50V
C505	1-123-305-00	ELECT	33MF	20%	10V
C506	1-123-354-00	ELECT	3.3MF	20%	50V
C507	1-161-021-00	CERAMIC	0.047MF	10%	25V
C508	1-161-021-00	CERAMIC	0.047MF	10%	25V
C509	1-161-021-00	CERAMIC	0.047MF	10%	25V
C510	1-123-354-00	ELECT	3.3MF	20%	50V
C511	1-123-354-00	ELECT	3.3MF	20%	50V
C512	1-130-516-51	MYLAR	0.01MF	10%	50V
C513	1-161-016-00	CERAMIC	0.018MF	10%	25V
C514	1-161-016-00	CERAMIC	0.018MF	10%	25V
C515	1-123-356-00	ELECT	10MF	20%	16V
C516	1-161-016-00	CERAMIC	0.018MF	10%	25V
C517	1-161-013-00	CERAMIC	0.01MF	10%	25V
C518	1-123-330-00	ELECT	22MF	20%	16V
C519	1-161-021-00	CERAMIC	0.047MF	10%	25V
C521	1-161-021-00	CERAMIC	0.047MF	10%	25V
C522	1-161-017-00	CERAMIC	0.022MF	10%	25V
C523	1-161-002-00	CERAMIC	0.0012MF	10%	25V
C524	1-123-306-00	ELECT	47MF	20%	10V
C525	1-161-016-00	CERAMIC	0.018MF	10%	25V
C526	1-161-013-00	CERAMIC	0.01MF	10%	25V
C527	1-123-318-00	ELECT	33MF	20%	16V
C528	1-123-333-00	ELECT	100MF	20%	16V
C529	1-161-021-00	CERAMIC	0.047MF	10%	25V
C530	1-108-602-51	MYLAR	0.091MF	5%	50V
C531	1-131-398-00	ELECT(SOLID)	0.22MF	10%	16V
C532	1-123-306-00	ELECT	47MF	20%	10V
C533	1-161-013-00	CERAMIC	0.01MF	10%	25V
C534	1-123-328-00	ELECT	4.7MF	20%	25V
C535	1-123-354-00	ELECT	3.3MF	20%	50V
C536	1-123-294-00	ELECT	47MF	20%	6.3V
C537	1-123-295-00	ELECT	100MF	20%	6.3V
C538	1-161-021-00	CERAMIC	0.047MF	10%	25V
C539	1-123-381-00	ELECT	2.2MF	20%	50V
C540	1-123-381-00	ELECT	2.2MF	20%	50V
C541	1-123-297-00	ELECT	330MF	20%	6.3V
C542	1-102-106-00	CERAMIC	100PF	10%	50V

The components identified by shading and mark ⚠ are critical for safety. Replace only with part number specified.

When indicating parts by reference number, please include the board name.

Ref.No.	Part No.	Description				Remark
C544	1-102-106-00	CERAMIC	100PF	10%	50V	
C545	1-161-016-00	CERAMIC	0.018MF	10%	25V	
C546	1-161-013-00	CERAMIC	0.01MF	10%	25V	
C547	1-123-354-00	ELECT	3.3MF	20%	50V	
C548	1-161-021-00	CERAMIC	0.047MF	10%	25V	
C549	1-161-021-00	CERAMIC	0.047MF	10%	25V	
C550	1-123-306-00	ELECT	47MF	20%	10V	
C551	1-131-375-00	TANTALUM	4.7MF	10%	10V	
C552	1-131-375-00	TANTALUM	4.7MF	10%	10V	
C553	1-130-499-51	MYLAR	0.22MF	5%	50V	
C554	1-123-356-00	ELECT	10MF	20%	16V	
C555	1-102-978-00	CERAMIC	220PF	5%	50V	
C556	1-161-021-00	CERAMIC	0.047MF	10%	25V	
C557	1-102-114-00	CERAMIC	470PF	10%	50V	
C558	1-123-318-00	ELECT	33MF	20%	16V	
C559	1-102-125-00	CERAMIC	0.0047MF	10%	50V	
C560	1-123-380-00	ELECT	1MF	20%	50V	
C561	1-123-381-00	ELECT	2.2MF	20%	50V	
C562	1-161-021-00	CERAMIC	0.047MF	10%	25V	
C563	1-124-429-00	ELECT	0.68MF	20%	50V	

FILTER

CF001	1-527-822-00	OSCILLATOR, CERAMIC

CONNECTOR

CN001♣	1-560-893-00	PIN, CONNECTOR 5P
CN002♣	1-560-891-00	PIN, CONNECTOR 3P
CN003♣	1-560-899-00	PIN, CONNECTOR 11P
CN004♣	1-560-890-00	PIN, CONNECTOR 2P
CN005♣	1-560-890-00	PIN, CONNECTOR 2P
CN006♣	1-560-890-00	PIN, CONNECTOR 2P
CN007♣	1-560-892-00	PIN, CONNECTOR 4P
CN008♣	1-560-890-00	PIN, CONNECTOR 2P
CN009♣	1-560-892-00	PIN, CONNECTOR 4P
CN010♣	1-560-891-00	PIN, CONNECTOR 3P
CN011♣	1-560-891-00	PIN, CONNECTOR 3P
CN012♣	1-560-895-00	PIN, CONNECTOR 7P
CN013♣	1-560-890-00	PIN, CONNECTOR 2P
CN014♣	1-560-892-00	PIN, CONNECTOR 4P
CN015♣	1-560-890-00	PIN, CONNECTOR 2P
CN016♣	1-560-894-00	PIN, CONNECTOR 6P
CN017♣	1-560-896-00	PIN, CONNECTOR 8P
CN018♣	1-560-892-00	PIN, CONNECTOR 4P
CN019♣	1-560-891-00	PIN, CONNECTOR 3P
CN020♣	1-560-891-00	PIN, CONNECTOR 3P
CN021♣	1-560-891-00	PIN, CONNECTOR 3P
CN022♣	1-560-892-00	PIN, CONNECTOR 4P
CN501♣	1-560-892-00	PIN, CONNECTOR 4P
CN502♣	1-560-896-00	PIN, CONNECTOR 8P
CN503♣	1-560-890-00	PIN, CONNECTOR 2P
CN504♣	1-560-467-00	PIN, CONNECTOR 4P
CN506♣	1-560-466-00	PIN, CONNECTOR 3P
CN507♣	1-560-467-00	PIN, CONNECTOR 4P

Ref.No.	Part No.	Description	Remark

DIODE

D001	8-719-911-19	DIODE 1SS119	
D002	8-719-911-19	DIODE 1SS119	
D003	8-719-911-19	DIODE 1SS119	
D004	8-719-911-19	DIODE 1SS119	
D005	8-719-100-69	DIODE RD13EB3	
D008	8-719-911-19	DIODE 1SS119	
D009	8-719-911-19	DIODE 1SS119	
D010	8-719-911-19	DIODE 1SS119	
D011	8-719-911-19	DIODE 1SS119	
D012	8-719-911-19	DIODE 1SS119	
D013	8-719-911-19	DIODE 1SS119	
D014	8-719-911-19	DIODE 1SS119	
D015	8-719-911-19	DIODE 1SS119	
D016	8-719-911-19	DIODE 1SS119	
D017	8-719-911-19	DIODE 1SS119	
D018	8-719-911-19	DIODE 1SS119	
D019	8-719-911-19	DIODE 1SS119	
D020	8-719-911-19	DIODE 1SS119	
D022	8-719-911-19	DIODE 1SS119	
D023	8-719-911-19	DIODE 1SS119	
D024	8-719-911-19	DIODE 1SS119	
D026	8-719-911-19	DIODE 1SS119	
D027	8-719-911-19	DIODE 1SS119	
D028	8-719-911-19	DIODE 1SS119	
D029	8-719-911-19	DIODE 1SS119	
D030	8-719-911-19	DIODE 1SS119	
D501	8-719-100-57	DIODE RD10EB2	
D505	8-719-911-19	DIODE 1SS119	
D506	8-719-911-19	DIODE 1SS119	
D515	8-719-911-19	DIODE 1SS119	
D516	8-719-911-19	DIODE 1SS119	
D518	8-719-911-19	DIODE 1SS119	
D520	8-719-982-04	DIODE ERB81-004	
D524	8-719-911-19	DIODE 1SS119	
D525	8-719-911-19	DIODE 1SS119	
D526	8-719-911-19	DIODE 1SS119	

IC

IC001	8-759-909-27	IC MB88421-122M	
IC002	8-759-800-72	IC LA7205	
IC003	8-759-600-24	IC M54543L	
IC004	8-759-908-40	IC EWA116	
IC501	8-751-941-00	IC CX-194B-0	
IC502	8-759-135-80	IC UPC358C	
IC503	8-759-240-66	IC TC4066BP	
IC504	8-759-132-40	IC UPC324C	
IC505	8-759-132-40	IC UPC324C	
IC506	8-759-240-51	IC TC4051BP	
IC507	8-759-240-51	IC TC4051BP	
IC508	8-759-240-53	IC TC4053BP	
IC509	8-759-240-66	IC TC4066BP	

When indicating parts by reference number, please include the board name.

Ref.No.	Part No.	Description	Remark
IC510	8-759-135-80	IC UPC358C	
IC511	8-759-135-80	IC UPC358C	
IC512	8-759-904-94	IC TL494CN	
IC513	8-741-109-10	IC BX-1091	
IC514	8-741-013-00	IC BX-1013	
		COIL	
L001	1-408-418-00	MICRO INDUCTOR 56UH	
L001	1-408-418-00	MICRO INDUCTOR 56UH	
L501	1-408-711-00	COIL, CHOKE	
L502	1-408-710-00	COIL, CHOKE	
		TRANSISTOR	
Q001	8-729-900-61	TRANSISTOR DTA114ES	
Q005	8-729-900-61	TRANSISTOR DTA114ES	
Q006	8-729-900-61	TRANSISTOR DTA114ES	
Q007	8-729-900-61	TRANSISTOR DTA114ES	
Q008	8-729-900-61	TRANSISTOR DTA114ES	
Q009	8-729-900-61	TRANSISTOR DTA114ES	
Q010	8-729-900-61	TRANSISTOR DTA114ES	
Q011	8-729-900-61	TRANSISTOR DTA114ES	
Q012	8-729-900-61	TRANSISTOR DTA114ES	
Q013	8-729-900-89	TRANSISTOR DTC144ES	
Q014	=>8-729-204-83	TRANSISTOR 2SA1048-GR	
Q015	8-729-900-89	TRANSISTOR DTC144ES	
Q016	=>8-729-245-83	TRANSISTOR 2SC2458	
Q017	=>8-729-245-83	TRANSISTOR 2SC2458	
Q018	=>8-729-245-83	TRANSISTOR 2SC2458	
Q019	8-729-900-61	TRANSISTOR DTA114ES	
Q020	8-729-900-61	TRANSISTOR DTA114ES	
Q022	8-729-900-61	TRANSISTOR DTA114ES	
Q023	8-729-900-61	TRANSISTOR DTA114ES	
Q024	8-729-116-42	TRANSISTOR 2SD1164	
Q025	8-729-900-89	TRANSISTOR DTC144ES	
Q026	8-729-177-32	TRANSISTOR 2SD773	
Q027	8-729-900-89	TRANSISTOR DTC144ES	
Q028	8-729-116-42	TRANSISTOR 2SD1164	
Q029	8-729-900-89	TRANSISTOR DTC144ES	
Q030	8-729-177-32	TRANSISTOR 2SD773	
Q031	8-729-900-89	TRANSISTOR DTC144ES	
Q032	8-729-900-89	TRANSISTOR DTC144ES	
Q033	=>8-729-245-83	TRANSISTOR 2SC2458	
Q034	8-729-900-89	TRANSISTOR DTC144ES	
Q035	8-729-900-69	TRANSISTOR DTA144WS	
Q036	8-729-900-89	TRANSISTOR DTC144ES	
Q037	8-729-900-89	TRANSISTOR DTC144ES	
Q038	8-729-900-69	TRANSISTOR DTA144WS	
Q039	8-729-900-89	TRANSISTOR DTC144ES	
Q040	8-729-900-89	TRANSISTOR DTC144ES	
Q041	8-729-900-89	TRANSISTOR DTC144ES	
Q042	8-729-900-89	TRANSISTOR DTC144ES	
Q043	=>8-729-245-83	TRANSISTOR 2SC2458	
Q044	=>8-729-245-83	TRANSISTOR 2SC2458	
Q045	=>8-729-245-83	TRANSISTOR 2SC2458	
Q047	=>8-729-245-83	TRANSISTOR 2SC2458	
Q048	8-729-177-32	TRANSISTOR 2SD773	
Q049	8-729-900-89	TRANSISTOR DTC144ES	
Q050	8-729-900-89	TRANSISTOR DTC144ES	
Q051	8-729-900-89	TRANSISTOR DTC144ES	
Q052	8-729-900-74	TRANSISTOR DTC143TS	
Q053	=>8-729-204-83	TRANSISTOR 2SA1048-GR	
Q054	8-729-900-89	TRANSISTOR DTC144ES	
Q501	=>8-729-177-43	TRANSISTOR 2SD774	
Q502	8-729-900-89	TRANSISTOR DTC144ES	
Q505	8-729-900-89	TRANSISTOR DTC144ES	
Q506	=>8-729-245-83	TRANSISTOR 2SC2458	
Q507	8-729-900-89	TRANSISTOR DTC144ES	
Q508	=>8-729-245-83	TRANSISTOR 2SC2458	
Q509	=>8-729-204-83	TRANSISTOR 2SA1048-GR	
Q510	=>8-729-177-43	TRANSISTOR 2SD774	
Q511	=>8-729-204-83	TRANSISTOR 2SA1048-GR	
Q512	=>8-729-177-43	TRANSISTOR 2SD774	
Q513	8-729-900-89	TRANSISTOR DTC144ES	
Q515	=>8-729-245-83	TRANSISTOR 2SC2458	
Q516	=>8-729-245-83	TRANSISTOR 2SC2458	
Q517	=>8-729-113-33	TRANSISTOR 2SB733-4	
Q518	=>8-729-204-83	TRANSISTOR 2SA1048-GR	
Q519	=>8-729-245-83	TRANSISTOR 2SC2458	
Q525	8-729-900-89	TRANSISTOR DTC144ES	
Q526	=>8-729-245-83	TRANSISTOR 2SC2458	
Q530	=>8-729-245-83	TRANSISTOR 2SC2458	
Q531	8-729-900-89	TRANSISTOR DTC144ES	
Q532	8-729-900-89	TRANSISTOR DTC144ES	
Q533	=>8-729-245-83	TRANSISTOR 2SC2458	
Q534	8-729-900-89	TRANSISTOR DTC144ES	
		RESISTOR	
R020	1-247-831-00	CARBON 1K 5% 1/6W	
R021	1-247-831-00	CARBON 1K 5% 1/6W	
R022	1-247-831-00	CARBON 1K 5% 1/6W	
R023	1-247-831-00	CARBON 1K 5% 1/6W	
R024	1-247-831-00	CARBON 1K 5% 1/6W	
R025	1-247-831-00	CARBON 1K 5% 1/6W	
R026	1-247-831-00	CARBON 1K 5% 1/6W	
R027	1-247-831-00	CARBON 1K 5% 1/6W	
R033	1-247-863-00	CARBON 22K 5% 1/6W	
R034	1-247-855-00	CARBON 10K 5% 1/6W	
R036	1-247-865-00	CARBON 27K 5% 1/6W	
R037	1-247-863-00	CARBON 22K 5% 1/6W	
R038	1-247-809-00	CARBON 120 5% 1/6W	
R039	1-247-829-00	CARBON 820 5% 1/6W	
R040	1-247-843-00	CARBON 3.3K 5% 1/6W	
R041	1-247-849-00	CARBON 5.6K 5% 1/6W	
R042	1-247-873-00	CARBON 56K 5% 1/6W	
R044	1-247-831-00	CARBON 1K 5% 1/6W	
R045	1-247-855-00	CARBON 10K 5% 1/6W	

When indicating parts by reference number, please include the board name.

Ref.No.	Part No.	Description				Remark
R047	1-247-831-00	CARBON	1K	5%	1/6W	
R048	1-247-831-00	CARBON	1K	5%	1/6W	
R049	1-247-831-00	CARBON	1K	5%	1/6W	
R050	1-247-831-00	CARBON	1K	5%	1/6W	
R051	1-247-831-00	CARBON	1K	5%	1/6W	
R057	1-247-831-00	CARBON	1K	5%	1/6W	
R064	1-247-827-00	CARBON	680	5%	1/6W	
R065	1-247-855-00	CARBON	10K	5%	1/6W	
R066	1-247-831-00	CARBON	1K	5%	1/6W	
R068	1-247-831-00	CARBON	1K	5%	1/6W	
R069	1-247-817-00	CARBON	270	5%	1/6W	
R070	1-247-831-00	CARBON	1K	5%	1/6W	
R072	1-247-831-00	CARBON	1K	5%	1/6W	
R073 ⚠	1-212-366-61	METAL OXIDE	3.3	5%	1W	F
R074 ⚠	1-246-981-11	CARBON	4.7	5%	1/6W	F
R075	1-247-855-00	CARBON	10K	5%	1/6W	
R077	1-247-855-00	CARBON	10K	5%	1/6W	
R078	1-247-855-00	CARBON	10K	5%	1/6W	
R080	1-247-855-00	CARBON	10K	5%	1/6W	
R082	1-247-855-00	CARBON	10K	5%	1/6W	
R083	1-247-855-00	CARBON	10K	5%	1/6W	
R090	1-247-808-00	CARBON	110	5%	1/6W	
R094	1-247-842-00	CARBON	3K	5%	1/6W	
R095	1-247-845-00	CARBON	3.9K	5%	1/6W	
R096	1-247-863-00	CARBON	22K	5%	1/6W	
R097	1-247-853-00	CARBON	8.2K	5%	1/6W	
R099	1-247-859-00	CARBON	15K	5%	1/6W	
R102	1-247-831-00	CARBON	1K	5%	1/6W	
R103	1-247-857-00	CARBON	12K	5%	1/6W	
R106	1-247-855-00	CARBON	10K	5%	1/6W	
R107	1-247-831-00	CARBON	1K	5%	1/6W	
R108	1-247-871-00	CARBON	47K	5%	1/6W	
R109	1-247-871-00	CARBON	47K	5%	1/6W	
R112	1-247-855-00	CARBON	10K	5%	1/6W	
R113	1-247-855-00	CARBON	10K	5%	1/6W	
R114	1-247-855-00	CARBON	10K	5%	1/6W	
R115 ⚠	1-212-360-61	METAL OXIDE	1	5%	1W	F
R116	1-247-831-00	CARBON	1K	5%	1/6W	
R117	1-247-879-00	CARBON	100K	5%	1/6W	
R118	1-247-873-00	CARBON	56K	5%	1/6W	
R119	1-247-862-00	CARBON	20K	5%	1/6W	
R120	1-247-813-00	CARBON	180	5%	1/6W	
R121	1-247-823-00	CARBON	470	5%	1/6W	
R122	1-247-865-00	CARBON	27K	5%	1/6W	
R123	1-247-865-00	CARBON	27K	5%	1/6W	
R124	1-247-870-00	CARBON	43K	5%	1/6W	
R125	1-247-855-00	CARBON	10K	5%	1/6W	
R129	1-247-862-00	CARBON	20K	5%	1/6W	
R130	1-247-855-00	CARBON	10K	5%	1/6W	
R131	1-247-813-00	CARBON	180	5%	1/6W	
R132	1-247-888-00	CARBON	240K	5%	1/6W	
R134	1-247-831-00	CARBON	1K	5%	1/6W	
R135	1-247-863-00	CARBON	22K	5%	1/6W	

Ref.No.	Part No.	Description				Remark
R136	1-247-863-00	CARBON	22K	5%	1/6W	
R501	1-246-444-00	CARBON	62	5%	1/4W	
R502	1-246-423-00	CARBON	8.2	5%	1/4W	
R503	1-247-821-00	CARBON	390	5%	1/6W	
R504	1-247-863-00	CARBON	22K	5%	1/6W	
R505	1-247-863-00	CARBON	22K	5%	1/6W	
R506	1-247-855-00	CARBON	10K	5%	1/6W	
R508	1-247-851-00	CARBON	6.8K	5%	1/6W	
R509	1-247-873-00	CARBON	56K	5%	1/6W	
R510	1-247-859-00	CARBON	15K	5%	1/6W	
R515	1-247-831-00	CARBON	1K	5%	1/6W	
R516	1-247-871-00	CARBON	47K	5%	1/6W	
R517	1-247-871-00	CARBON	47K	5%	1/6W	
R518	1-247-851-00	CARBON	6.8K	5%	1/6W	
R519	1-247-857-00	CARBON	12K	5%	1/6W	
R520	1-247-849-00	CARBON	5.6K	5%	1/6W	
R521	1-247-887-00	CARBON	220K	5%	1/6W	
R522	1-247-887-00	CARBON	220K	5%	1/6W	
R523	1-247-865-00	CARBON	27K	5%	1/6W	
R524	1-247-865-00	CARBON	27K	5%	1/6W	
R525	1-247-848-00	CARBON	5.1K	5%	1/6W	
R526	1-247-867-00	CARBON	33K	5%	1/6W	
R527	1-247-867-00	CARBON	33K	5%	1/6W	
R528	1-247-867-00	CARBON	33K	5%	1/6W	
R529	1-247-835-00	CARBON	1.5K	5%	1/6W	
R530	1-247-847-00	CARBON	4.7K	5%	1/6W	
R531	1-247-879-00	CARBON	100K	5%	1/6W	
R532	1-247-895-00	CARBON	470K	5%	1/6W	
R535	1-215-397-00	METAL	100	1%	1/6W	
R538	1-247-831-00	CARBON	1K	5%	1/6W	
R539	1-247-838-00	CARBON	2K	5%	1/6W	
R540	1-247-855-00	CARBON	10K	5%	1/6W	
R541	1-247-855-00	CARBON	10K	5%	1/6W	
R542 ⚠	1-246-981-11	CARBON	4.7	5%	1/6W	F
R543	1-247-872-00	CARBON	51K	5%	1/6W	
R544	1-247-863-00	CARBON	22K	5%	1/6W	
R545	1-247-843-00	CARBON	3.3K	5%	1/6W	
R546	1-247-843-00	CARBON	3.3K	5%	1/6W	
R547	1-247-837-00	CARBON	1.8K	5%	1/6W	
R548	1-247-900-00	CARBON	750K	5%	1/6W	
R549	1-247-847-00	CARBON	4.7K	5%	1/6W	
R550	1-247-856-00	CARBON	11K	5%	1/6W	
R551	1-247-883-00	CARBON	150K	5%	1/6W	
R552	1-247-883-00	CARBON	150K	5%	1/6W	
R553	1-247-857-00	CARBON	12K	5%	1/6W	
R554	1-247-847-00	CARBON	4.7K	5%	1/6W	
R555	1-247-867-00	CARBON	33K	5%	1/6W	
R556	1-247-881-00	CARBON	120K	5%	1/6W	
R557	1-247-883-00	CARBON	150K	5%	1/6W	
R558	1-247-847-00	CARBON	4.7K	5%	1/6W	
R559	1-247-867-00	CARBON	33K	5%	1/6W	
R560	1-247-842-00	CARBON	3K	5%	1/6W	
R561	1-247-817-00	CARBON	270	5%	1/6W	

The components identified by shading and mark ⚠ are critical for safety. Replace only with part number specified.

When indicating parts by reference number, please include the board name.

Ref.No.	Part No.	Description				Remark
R562	1-247-849-00	CARBON	5.6K	5%	1/6W	
R563	1-247-839-00	CARBON	2.2K	5%	1/6W	
R564	1-247-818-00	CARBON	300	5%	1/6W	
R565 ⚠	1-212-360-61	METAL OXIDE	1	5%	1W	F
R566	1-247-879-00	CARBON	100K	5%	1/6W	
R567	1-247-879-00	CARBON	100K	5%	1/6W	
R568	1-247-887-00	CARBON	220K	5%	1/6W	
R569	1-247-855-00	CARBON	10K	5%	1/6W	
R570	1-247-867-00	CARBON	33K	5%	1/6W	
R571	1-247-871-00	CARBON	47K	5%	1/6W	
R572	1-247-855-00	CARBON	10K	5%	1/6W	
R573	1-247-855-00	CARBON	10K	5%	1/6W	
R574	1-247-831-00	CARBON	1K	5%	1/6W	
R575	1-247-831-00	CARBON	1K	5%	1/6W	
R576	1-246-418-00	CARBON	5.1	5%	1/4W	
R577	1-247-831-00	CARBON	1K	5%	1/6W	
R578	1-247-859-00	CARBON	15K	5%	1/6W	
R579	1-247-831-00	CARBON	1K	5%	1/6W	
R580	1-247-873-00	CARBON	56K	5%	1/6W	
R582	1-247-859-00	CARBON	15K	5%	1/6W	
R585	1-247-871-00	CARBON	47K	5%	1/6W	
R586	1-247-831-00	CARBON	1K	5%	1/6W	
R587	1-247-899-00	CARBON	680K	5%	1/6W	
R588	1-247-831-00	CARBON	1K	5%	1/6W	
R589	1-247-855-00	CARBON	10K	5%	1/6W	
R590	1-247-855-00	CARBON	10K	5%	1/6W	
R591	1-215-462-00	METAL	51K	1%	1/6W	
R592	1-247-859-00	CARBON	15K	5%	1/6W	
R593	1-247-835-00	CARBON	1.5K	5%	1/6W	
R594	1-247-883-00	CARBON	150K	5%	1/6W	
R595	1-247-879-00	CARBON	100K	5%	1/6W	
R596	1-247-903-00	CARBON	1M	5%	1/6W	
R597	1-247-859-00	CARBON	15K	5%	1/6W	
R598	1-247-843-00	CARBON	3.3K	5%	1/6W	
R599	1-247-889-00	CARBON	270K	5%	1/6W	
R600	1-215-413-00	METAL	470	1%	1/6W	
R601	1-247-867-00	CARBON	33K	5%	1/6W	
R602	1-247-867-00	CARBON	33K	5%	1/6W	
R603	1-247-895-00	CARBON	470K	5%	1/6W	
R604	1-247-840-00	CARBON	2.4K	5%	1/6W	
R605	1-247-840-00	CARBON	2.4K	5%	1/6W	
R606	1-247-903-00	CARBON	1M	5%	1/6W	
R607	1-247-871-00	CARBON	47K	5%	1/6W	
R608	1-247-850-00	CARBON	6.2K	5%	1/6W	
R609	1-247-867-00	CARBON	33K	5%	1/6W	
R611	1-247-883-00	CARBON	150K	5%	1/6W	
R612	1-247-867-00	CARBON	33K	5%	1/6W	
R613	1-247-867-00	CARBON	33K	5%	1/6W	
R614	1-247-895-00	CARBON	470K	5%	1/6W	
R615	1-247-840-00	CARBON	2.4K	5%	1/6W	
R616	1-247-840-00	CARBON	2.4K	5%	1/6W	
R617	1-247-903-00	CARBON	1M	5%	1/6W	
R618	1-247-871-00	CARBON	47K	5%	1/6W	
R619	1-247-850-00	CARBON	6.2K	5%	1/6W	
R621	1-247-873-00	CARBON	56K	5%	1/6W	
R622	1-247-871-00	CARBON	47K	5%	1/6W	
R623	1-247-873-00	CARBON	56K	5%	1/6W	
R629	1-247-855-00	CARBON	10K	5%	1/6W	
R630	1-247-879-00	CARBON	100K	5%	1/6W	
R631	1-247-879-00	CARBON	100K	5%	1/6W	
R632	1-247-883-00	CARBON	150K	5%	1/6W	
R633	1-247-883-00	CARBON	150K	5%	1/6W	
R634	1-247-867-00	CARBON	33K	5%	1/6W	
R635	1-247-871-00	CARBON	47K	5%	1/6W	
R637	1-247-873-00	CARBON	56K	5%	1/6W	
R638	1-247-867-00	CARBON	33K	5%	1/6W	
R639	1-247-868-00	CARBON	36K	5%	1/6W	
R640	1-247-874-00	CARBON	62K	5%	1/6W	
R641	1-247-868-00	CARBON	36K	5%	1/6W	
R642	1-247-876-00	CARBON	75K	5%	1/6W	
R643	1-247-883-00	CARBON	150K	5%	1/6W	
R650	1-215-462-00	METAL	51K	1%	1/6W	
R651	1-215-417-31	METAL	680	1%	1/6W	
R652	1-215-443-00	METAL	8.2K	1%	1/6W	
R653	1-215-426-31	METAL	1.6K	1%	1/6W	
R654	1-247-855-00	CARBON	10K	5%	1/6W	
R655	1-215-456-00	METAL	30K	1%	1/6W	
R656	1-215-424-31	METAL	1.3K	1%	1/6W	
R657	1-247-857-00	CARBON	12K	5%	1/6W	
R658	1-247-873-00	CARBON	56K	5%	1/6W	
R659	1-247-873-00	CARBON	56K	5%	1/6W	
R660	1-247-835-00	CARBON	1.5K	5%	1/6W	
R661	1-247-873-00	CARBON	56K	5%	1/6W	
R666	1-247-840-00	CARBON	2.4K	5%	1/6W	
R667	1-247-867-00	CARBON	33K	5%	1/6W	
R669	1-247-863-00	CARBON	22K	5%	1/6W	
R670	1-247-867-00	CARBON	33K	5%	1/6W	
R671	1-247-867-00	CARBON	33K	5%	1/6W	
R673	1-247-841-00	CARBON	2.7K	5%	1/6W	
R674	1-247-867-00	CARBON	33K	5%	1/6W	
R675	1-247-879-00	CARBON	100K	5%	1/6W	
R676	1-215-413-00	METAL	470	1%	1/6W	
R677	1-215-467-00	METAL	82K	1%	1/6W	
R679	1-247-863-00	CARBON	22K	5%	1/6W	
R680	1-247-855-00	CARBON	10K	5%	1/6W	
R681	1-247-863-00	CARBON	22K	5%	1/6W	
R683	1-247-839-00	CARBON	2.2K	5%	1/6W	
R684	1-247-867-00	CARBON	33K	5%	1/6W	
R685	1-247-861-00	CARBON	18K	5%	1/6W	
R686	1-247-844-00	CARBON	3.6K	5%	1/6W	
R687	1-247-871-00	CARBON	47K	5%	1/6W	
R690	1-215-437-00	METAL	4.7K	1%	1/6W	
R691	1-215-437-00	METAL	4.7K	1%	1/6W	
R692	1-215-437-00	METAL	4.7K	1%	1/6W	
R693	1-215-437-00	METAL	4.7K	1%	1/6W	
R696 ⚠	1-212-356-61	METAL OXIDE	0.47	5%	1W	F

The components identified by shading and mark ⚠ are critical for safety. Replace only with part number specified.

When indicating parts by reference number, please include the board name.

Ref.No.	Part No.	Description	Remark
R697	1-247-867-00	CARBON 33K 5% 1/6W	

VARIABLE RESISTOR

RV501	1-228-753-00	RES, ADJ, CARBON 470K	
RV503	1-228-996-00	RES, ADJ, METAL GLAZE 47K	
RV504	1-228-996-00	RES, ADJ, METAL GLAZE 47K	
RV505	1-228-996-00	RES, ADJ, METAL GLAZE 47K	
RV506	1-228-996-00	RES, ADJ, METAL GLAZE 47K	
RV507	1-228-996-00	RES, ADJ, METAL GLAZE 47K	
RV508	1-228-996-00	RES, ADJ, METAL GLAZE 47K	
RV511	1-228-991-00	RES, ADJ, METAL GLAZE 2.2K	
RV512	1-228-989-00	RES, ADJ, METAL GLAZE 470	
RV513	1-228-989-00	RES, ADJ, METAL GLAZE 470	
RV514	1-228-994-00	RES, ADJ, METAL GLAZE 10K	
RV515	1-228-994-00	RES, ADJ, METAL GLAZE 10K	
RV516	1-228-996-00	RES, ADJ, METAL GLAZE 47K	
RV520	1-228-994-00	RES, ADJ, METAL GLAZE 10K	
RV521	1-228-994-00	RES, ADJ, METAL GLAZE 10K	

THERMISTOR

TH001	1-800-202-XX	THERMISTOR S-10K	
	1-800-202-XX	THERMISTOR S-10K	

****

♣:A-6715-194-A SD-3 BOARD, COMPLETE
****

CAPACITOR

C501	1-123-356-00	ELECT	10MF	20%	16V
C502	1-123-380-00	ELECT	1MF	20%	50V
C503	1-161-036-00	CERAMIC	0.047MF	20%	25V
C504	1-123-356-00	ELECT	10MF	20%	16V
C505	1-161-015-00	CERAMIC	0.015MF	10%	25V
C506	1-161-015-00	CERAMIC	0.015MF	10%	25V
C507	1-161-015-00	CERAMIC	0.015MF	10%	25V
C509	1-161-036-00	CERAMIC	0.047MF	20%	25V
C510	1-102-823-00	CERAMIC	43PF	5%	50V
C511	1-161-032-00	CERAMIC	0.01MF	20%	25V
C512	1-123-381-00	ELECT	2.2MF	20%	50V
C513	1-108-589-00	MYLAR	0.027MF	5%	50V
C514	1-123-306-00	ELECT	47MF	20%	10V
C515	1-123-356-00	ELECT	10MF	20%	16V
C516	1-161-036-00	CERAMIC	0.047MF	20%	25V
C517	1-161-036-00	CERAMIC	0.047MF	20%	25V
C521	1-161-032-00	CERAMIC	0.01MF	20%	25V

FILTER

CF501	1-527-998-00	FILTER, CERAMIC

CONNECTOR

CN501♣	1-560-898-00	PIN, CONNECTOR 10P
CN502♣	1-560-892-00	PIN, CONNECTOR 4P
CN503♣	1-560-891-00	PIN, CONNECTOR 3P
CN504♣	1-560-892-00	PIN, CONNECTOR 4P
CN505♣	1-560-892-00	PIN, CONNECTOR 4P

DIODE

D501	8-719-911-19	DIODE 1SS119
D502	8-719-911-19	DIODE 1SS119
D503	8-719-911-19	DIODE 1SS119
D504	8-719-911-19	DIODE 1SS119

IC

IC501	8-759-979-16	IC CX-7916
IC504	8-759-240-11	IC TC4011BP
IC505	8-759-240-11	IC TC4011BP
IC506	8-759-904-95	IC BA7007
IC507	8-759-240-81	IC TC4081BP
IC508	8-759-240-71	IC TC4071BP

VARIABLE COIL

LV501	1-407-291-00	MICRO INDUCTOR 15MMH

TRANSISTOR

Q501	=>8-729-245-83	TRANSISTOR 2SC2458
Q502	=>8-729-245-83	TRANSISTOR 2SC2458
Q503	=>8-729-204-83	TRANSISTOR 2SA1048-GR
Q504	=>8-729-204-83	TRANSISTOR 2SA1048-GR
Q506	=>8-729-245-83	TRANSISTOR 2SC2458

RESISTOR

R501	1-247-867-00	CARBON	33K	5%	1/6W
R502	1-247-855-00	CARBON	10K	5%	1/6W
R503	1-247-855-00	CARBON	10K	5%	1/6W
R504	1-247-865-00	CARBON	27K	5%	1/6W
R505	1-247-835-00	CARBON	1.5K	5%	1/6W
R506	1-247-839-00	CARBON	2.2K	5%	1/6W
R507	1-247-839-00	CARBON	2.2K	5%	1/6W
R508	1-247-855-00	CARBON	10K	5%	1/6W
R509	1-247-867-00	CARBON	33K	5%	1/6W
R510	1-247-855-00	CARBON	10K	5%	1/6W
R511	1-247-867-00	CARBON	33K	5%	1/6W
R514	1-247-895-00	CARBON	470K	5%	1/6W
R515	1-247-863-00	CARBON	22K	5%	1/6W
R516	1-247-831-00	CARBON	1K	5%	1/6W
R517	1-247-888-00	CARBON	240K	5%	1/6W
R518	1-247-855-00	CARBON	10K	5%	1/6W
R519	1-247-846-00	CARBON	4.3K	5%	1/6W
R520	1-247-847-00	CARBON	4.7K	5%	1/6W
R525	1-247-871-00	CARBON	47K	5%	1/6W
R526	1-247-871-00	CARBON	47K	5%	1/6W
R527	1-247-871-00	CARBON	47K	5%	1/6W
R528	1-247-870-00	CARBON	43K	5%	1/6W
R529	1-247-870-00	CARBON	43K	5%	1/6W
R530	1-247-870-00	CARBON	43K	5%	1/6W

When indicating parts by reference number, please include the board name.

Ref.No.	Part No.	Description				Remark
R531	1-247-847-00	CARBON	4.7K	5%	1/6W	
R532	1-247-839-00	CARBON	2.2K	5%	1/6W	
R539	1-247-863-00	CARBON	22K	5%	1/6W	

VARIABLE RESISTOR

RV501	1-228-744-00	RES, ADJ, CARBON 470	

****

♠	A-6721-191-A	TA-15 BOARD, COMPLETE	
		**********	
⚠	1-463-350-00	TUNER (BT-881)	
♠	1-611-061-00	MT-6 BOARD	
♠	3-655-214-00	CLIP, CABLE	
♠	3-662-383-00	BAND, RETAINER, TUNER	
♠	3-682-620-00	CASE (UPPER), SHIELD, T	
♠	3-682-621-00	CASE (MAIN), SHIELD, T	
♠	3-682-622-00	CASE (LOWER), SHIELD, T	
♠	3-682-624-00	CASE (MAIN), SHIELD, AUDIO	
♠	3-682-676-00	CASE (LOWER), SHIELD, AUDIO	
♠	3-682-677-00	CASE (UPPER), SHIELD, AUDIO	

CAPACITOR

Ref.No.	Part No.	Description				Remark
C001	1-161-032-00	CERAMIC	0.01MF	20%	25V	
C002	1-108-389-00	MYLAR	0.1MF	10%	100V	
C003	1-123-318-00	ELECT	33MF	20%	16V	
C004	1-123-356-00	ELECT	10MF	20%	16V	
C005	1-161-032-00	CERAMIC	0.01MF	20%	25V	
C006	1-123-356-00	ELECT	10MF	20%	16V	
C007	1-123-330-00	ELECT	22MF	20%	16V	
C008	1-123-369-00	ELECT	4.7MF	20%	50V	
C009	1-123-356-00	ELECT	10MF	20%	50V	
C010	1-127-471-00	ELECT(SOLID)	0.68MF	5%	16V	
C011	1-102-121-00	CERAMIC	0.0022MF	10%	50V	
C012	1-102-125-00	CERAMIC	0.0047MF	10%	50V	
C013	1-123-380-00	ELECT	1MF	20%	50V	
C014	1-102-125-00	CERAMIC	0.0047MF	10%	50V	
C015	1-102-125-00	CERAMIC	0.0047MF	10%	50V	
C016	1-102-125-00	CERAMIC	0.0047MF	10%	50V	
C017	1-123-356-00	ELECT	10MF	20%	16V	
C018	1-102-125-00	CERAMIC	0.0047MF	10%	50V	
C019	1-102-510-00	CERAMIC	12PF	5%	50V	
C020	1-102-523-00	CERAMIC	56PF	5%	50V	
C021	1-108-837-00	MYLAR	0.01MF	10%	50V	
C022	1-123-380-00	ELECT	1MF	20%	50V	
C023	1-102-129-00	CERAMIC	0.01MF	10%	50V	
C024	1-102-129-00	CERAMIC	0.01MF	10%	50V	
C025	1-102-523-00	CERAMIC	56PF	5%	50V	
C026	1-123-333-00	ELECT	100MF	20%	16V	
C027	1-123-447-00	ELECT	0.22MF	20%	50V	
C028	1-123-447-00	ELECT	0.22MF	20%	50V	
C029	1-108-587-00	MYLAR	0.022MF	5%	50V	
C030	1-123-351-00	ELECT	0.47MF	20%	50V	
C031	1-101-888-00	CERAMIC	68PF	5%	50V	
C032	1-101-884-00	CERAMIC	56PF	5%	50V	
C033	1-123-318-00	ELECT	33MF	20%	16V	
C035	1-101-006-00	CERAMIC	0.047MF		50V	
C036	1-123-356-00	ELECT	10MF	20%	16V	
C037	1-123-356-00	ELECT	10MF	20%	50V	
C038	1-123-298-00	ELECT	470MF	20%	6.3V	
C039	1-102-125-00	CERAMIC	0.0047MF	10%	50V	
C040	1-102-125-00	CERAMIC	0.0047MF	10%	50V	
C041	1-102-125-00	CERAMIC	0.0047MF	10%	50V	
C042	1-102-125-00	CERAMIC	0.0047MF	10%	50V	
C043	1-102-125-00	CERAMIC	0.0047MF	10%	50V	
C045	1-123-318-00	ELECT	33MF	20%	16V	
C501	1-130-472-00	MYLAR	0.0012MF	5%	50V	
C502	1-130-472-00	MYLAR	0.0012MF	5%	50V	
C503	1-161-055-00	CERAMIC	0.022MF	10%	50V	
C504	1-123-356-00	ELECT	10MF	20%	16V	
C505	1-123-356-00	ELECT	10MF	20%	16V	
C506	1-123-307-00	ELECT	100MF	20%	10V	
C507	1-123-380-00	ELECT	1MF	20%	50V	
C508	1-123-332-00	ELECT	47MF	20%	16V	
C509	1-123-356-00	ELECT	10MF	20%	16V	
C510	1-123-380-00	ELECT	1MF	20%	50V	
C511	1-123-354-00	ELECT	3.3MF	20%	50V	
C512	1-130-480-00	MYLAR	0.0056MF	5%	50V	
C513	1-130-481-00	MYLAR	0.0068MF	5%	50V	
C514	1-123-380-00	ELECT	1MF	20%	50V	
C515	1-130-475-00	MYLAR	0.0022MF	5%	50V	
C516	1-161-316-00	CERAMIC	270PF	10%	50V	
C517	1-123-381-00	ELECT	2.2MF	20%	50V	
C518	1-107-166-00	MICA	62PF	5%	500V	
C519	1-123-356-00	ELECT	10MF	20%	16V	
C520	1-123-330-00	ELECT	22MF	20%	16V	
C521	1-130-485-00	MYLAR	0.015MF	5%	50V	
C522	1-123-356-00	ELECT	10MF	20%	16V	
C523	1-123-380-00	ELECT	1MF	20%	50V	
C524	1-123-380-00	ELECT	1MF	20%	50V	
C525	1-123-380-00	ELECT	1MF	20%	50V	
C526	1-123-380-00	ELECT	1MF	20%	50V	
C527	1-130-479-00	MYLAR	0.0047MF	5%	50V	
C528	1-130-477-00	MYLAR	0.0033MF	5%	50V	
C529	1-123-332-00	ELECT	47MF	20%	16V	
C530	1-136-051-00	FILM	0.0039MF	10%	630V	
C550	1-123-330-00	ELECT	22MF	20%	16V	
C551	1-130-491-00	MYLAR	0.047MF	5%	50V	
C801	1-123-354-00	ELECT	3.3MF	20%	50V	
C803	1-125-299-00	**********	47000MF		5V	
C805	1-102-508-00	CERAMIC	10PF	0.5 PF	50V	
C806	1-123-318-00	ELECT	33MF	20%	16V	
C807	1-161-063-00	CERAMIC	0.1MF	10%	50V	
C808	1-161-063-00	CERAMIC	0.1MF	10%	50V	
C809	1-161-063-00	CERAMIC	0.1MF	10%	50V	

The components identified by shading and mark ⚠ are critical for safety. Replace only with part number specified.

When indicating parts by reference number, please include the board name.

Ref.No.	Part No.	Description	Remark
		FILTER	
CF001	1-404-134-00	TRAP, CERAMIC (5.5MHZ)	
CF003	1-527-263-00	CERAMIC FILTER (5.5MHZ)	
CF005	1-404-134-00	TRAP, CERAMIC (5.5MHZ)	
		CONNECTOR	
CN001♣	1-560-893-00	PIN, CONNECTOR 5P	
CN501♣	1-560-893-00	PIN, CONNECTOR 5P	
CN502♣	1-560-894-00	PIN, CONNECTOR 6P	
CN503♣	1-560-891-00	PIN, CONNECTOR 3P	
CN504♣	1-560-893-00	PIN, CONNECTOR 5P	
CN801♣	1-560-892-00	PIN, CONNECTOR 4P	
CN802♣	1-560-896-00	PIN, CONNECTOR 8P	
CN803♣	1-560-899-00	PIN, CONNECTOR 11P	
CN804♣	1-560-891-00	PIN, CONNECTOR 3P	
CN805♣	1-560-899-00	PIN, CONNECTOR 11P	
CN806♣	1-560-893-00	PIN, CONNECTOR 5P	
CN807♣	1-560-896-00	PIN, CONNECTOR 8P	
CN808♣	1-560-897-00	PIN, CONNECTOR 9P	
CN809♣	1-560-900-00	PIN, CONNECTOR 12P	
		TRIMMER	
CV801	1-141-022-11	CAP, TRIMMER, CERAMIC	
		DIODE	
D001	8-719-911-19	DIODE 1SS119	
D002	8-719-911-19	DIODE 1SS119	
D005	8-719-911-19	DIODE 1SS119	
D006	8-719-911-19	DIODE 1SS119	
D007	8-719-911-19	DIODE 1SS119	
D008	8-719-911-19	DIODE 1SS119	
D009	8-719-911-19	DIODE 1SS119	
D010	8-719-911-19	DIODE 1SS119	
D011	8-719-911-19	DIODE 1SS119	
D012	8-719-911-19	DIODE 1SS119	
D013	8-719-911-19	DIODE 1SS119	
D014	8-719-911-19	DIODE 1SS119	
D015	8-719-911-19	DIODE 1SS119	
D016	8-719-911-19	DIODE 1SS119	
D017	8-719-911-19	DIODE 1SS119	
D018	8-719-911-19	DIODE 1SS119	
D019	8-719-911-19	DIODE 1SS119	
D020	8-719-911-19	DIODE 1SS119	
D021	8-719-911-19	DIODE 1SS119	
D022	8-719-911-19	DIODE 1SS119	
D023	8-719-911-19	DIODE 1SS119	
D024	8-719-911-19	DIODE 1SS119	
D025	8-719-911-19	DIODE 1SS119	
D026	8-719-911-19	DIODE 1SS119	
D027	8-719-911-19	DIODE 1SS119	
D028	8-719-911-19	DIODE 1SS119	
D029	8-719-100-90	DIODE RD24EB2	
D030	8-719-100-55	DIODE RD9.1EB3	
D501	8-719-911-19	DIODE 1SS119	
D502	8-719-911-19	DIODE 1SS119	
D503	8-719-911-19	DIODE 1SS119	
D504	8-719-911-19	DIODE 1SS119	
D502	8-719-911-19	DIODE 1SS119	
D801	8-719-911-19	DIODE 1SS119	
D802	8-719-911-19	DIODE 1SS119	
D803	8-719-911-19	DIODE 1SS119	
D804	8-719-812-41	DIODE TLR124	
D805	=>8-719-168-07	DIODE RD6.8E-B	
D806	8-719-911-19	DIODE 1SS119	
D807	8-719-191-07	DIODE RD9.1E	
D808	8-719-151-07	DIODE RD5.1E-B	
D811	8-719-911-19	DIODE 1SS119	
D812	8-719-911-19	DIODE 1SS119	
D813	8-719-911-19	DIODE 1SS119	
		IC	
IC001	8-758-852-00	IC CX-885B	
IC002	8-759-600-44	IC M54836AP	
IC003	8-759-157-40	IC UPC574J	
IC501	8-759-908-38	IC BA5112LS	
IC502	8-759-101-73	IC UPC1513HA	
IC802	8-759-240-81	IC TC4081BP	
IC803	8-759-101-63	IC UPD7519G-033	
		COIL	
L001	1-408-403-00	MICRO INDUCTOR 3.3UH	
L002	1-408-434-00	MICRO INDUCTOR 2.2UH	
L003	1-408-445-00	MICRO INDUCTOR 18UH	
L006	1-408-448-00	MICRO INDUCTOR 33UH	
L007	1-408-438-00	MICRO INDUCTOR 4.7UH	
L010	1-408-408-00	MICRO INDUCTOR 8.2UH	
L011	1-408-430-00	MICRO INDUCTOR 1UH	
L501	1-407-718-00	MICRO INDUCTOR 1.2MMH	
L502	1-407-510-00	MICRO INDUCTOR 33MMH	
		FILTER	
LPF501	1-231-726-00	FILTER, LOWPASS	
		VARIABLE COIL	
LV501	1-408-523-00	COIL, VARIABLE	
		PRESET UNIT	
PS001	1-230-255-00	PRESET UNIT (8 GANG)	
		TRANSISTOR	
Q001	=>8-729-204-83	TRANSISTOR 2SA1048-GR	
Q002	=>8-729-204-83	TRANSISTOR 2SA1048-GR	
Q003	=>8-729-204-83	TRANSISTOR 2SA1048-GR	
Q004	8-765-300-00	TRANSISTOR 2SC2009	

When indicating parts by reference number, please include the board name.

TA-15

Ref.No.	Part No.	Description	Remark
Q005	=>8-729-245-83	TRANSISTOR 2SC2458	
Q006	=>8-769-200-20	TRANSISTOR 2SK107-2	
Q008	=>8-729-245-83	TRANSISTOR 2SC2458	
Q009	=>8-729-245-83	TRANSISTOR 2SC2458	
Q010	=>8-729-245-83	TRANSISTOR 2SC2458	
Q011	=>8-729-245-83	TRANSISTOR 2SC2458	
Q012	=>8-729-245-83	TRANSISTOR 2SC2458	
Q013	=>8-729-245-83	TRANSISTOR 2SC2458	
Q014	=>8-729-204-83	TRANSISTOR 2SA1048-GR	
Q015	=>8-729-204-83	TRANSISTOR 2SA1048-GR	
Q501	=>8-729-245-83	TRANSISTOR 2SC2458	
Q502	8-761-710-00	TRANSISTOR 2SC1637-1	
Q503	=>8-729-204-83	TRANSISTOR 2SA1048-GR	
Q504	8-729-900-36	TRANSISTOR DTC124ES	
Q505	8-729-900-63	TRANSISTOR DTA124ES	
Q506	=>8-729-177-43	TRANSISTOR 2SD774	
Q508	8-729-900-63	TRANSISTOR DTA124ES	
Q509	8-729-900-36	TRANSISTOR DTC124ES	
Q510	8-729-900-80	TRANSISTOR DTC114ES	
Q511	8-729-900-36	TRANSISTOR DTC124ES	
Q512	8-729-900-61	TRANSISTOR DTA114ES	
Q513	8-729-900-36	TRANSISTOR DTC124ES	
Q514	8-729-900-36	TRANSISTOR DTC124ES	
Q515	8-729-900-63	TRANSISTOR DTA124ES	
Q516	8-729-900-36	TRANSISTOR DTC124ES	
Q520	8-729-178-54	TRANSISTOR 2SC2785-H	
Q801	=>8-729-245-83	TRANSISTOR 2SC2458	
Q802	8-729-965-22	TRANSISTOR 2SC1652	
Q803	8-729-965-22	TRANSISTOR 2SC1652	
Q805	8-729-965-22	TRANSISTOR 2SC1652	
Q808	8-729-245-83	TRANSISTOR 2SC2458	
Q809	8-729-245-83	TRANSISTOR 2SC2458	
Q810	=>8-729-204-83	TRANSISTOR 2SA1048-GR	
Q811	=>8-729-177-43	TRANSISTOR 2SD774	
Q816	=>8-729-245-83	TRANSISTOR 2SC2458	
Q817	=>8-729-245-83	TRANSISTOR 2SC2458	

RESISTOR

Ref.No.	Part No.	Description				Remark
R001	1-247-879-00	CARBON	100K	5%	1/6W	
R002	1-247-855-00	CARBON	10K	5%	1/6W	
R003	1-247-855-00	CARBON	10K	5%	1/6W	
R004	1-247-855-00	CARBON	10K	5%	1/6W	
R005	1-247-855-00	CARBON	10K	5%	1/6W	
R006	1-247-855-00	CARBON	10K	5%	1/6W	
R007	1-247-855-00	CARBON	10K	5%	1/6W	
R011	1-247-855-00	CARBON	10K	5%	1/6W	
R012	1-247-895-00	CARBON	470K	5%	1/6W	
R014	1-247-899-00	CARBON	680K	5%	1/6W	
R016	1-247-883-00	CARBON	150K	5%	1/6W	
R017	1-247-867-00	CARBON	33K	5%	1/6W	
R018	1-247-871-00	CARBON	47K	5%	1/6W	
R019	1-247-871-00	CARBON	47K	5%	1/6W	
R020	1-247-895-00	CARBON	470K	5%	1/6W	
R021	1-247-879-00	CARBON	100K	5%	1/6W	
R022	1-247-879-00	CARBON	100K	5%	1/6W	
R023	1-247-879-00	CARBON	100K	5%	1/6W	
R024	1-247-879-00	CARBON	100K	5%	1/6W	
R025	1-247-871-00	CARBON	47K	5%	1/6W	
R026	1-247-863-00	CARBON	22K	5%	1/6W	
R027	1-247-860-00	CARBON	16K	5%	1/6W	
R028	1-247-881-00	CARBON	120K	5%	1/6W	
R029	1-247-863-00	CARBON	22K	5%	1/6W	
R030	1-247-863-00	CARBON	22K	5%	1/6W	
R031	1-247-863-00	CARBON	22K	5%	1/6W	
R032	1-247-863-00	CARBON	22K	5%	1/6W	
R033	1-247-863-00	CARBON	22K	5%	1/6W	
R034	1-247-863-00	CARBON	22K	5%	1/6W	
R035	1-247-863-00	CARBON	22K	5%	1/6W	
R036	1-247-863-00	CARBON	22K	5%	1/6W	
R037	1-247-869-00	CARBON	39K	5%	1/6W	
R039	1-247-837-00	CARBON	1.8K	5%	1/6W	
R040	1-247-839-00	CARBON	2.2K	5%	1/6W	
R041	1-247-865-00	CARBON	27K	5%	1/6W	
R042	1-247-831-00	CARBON	1K	5%	1/6W	
R043	1-247-872-00	CARBON	51K	5%	1/6W	
R044	1-247-864-00	CARBON	24K	5%	1/6W	
R045	1-247-819-00	CARBON	330	5%	1/6W	
R046	1-247-807-00	CARBON	100	5%	1/6W	
R047	1-247-857-00	CARBON	12K	5%	1/6W	
R048	1-247-831-00	CARBON	1K	5%	1/6W	
R050	1-247-815-00	CARBON	220	5%	1/6W	
R051	1-247-829-00	CARBON	820	5%	1/6W	
R052	1-247-869-00	CARBON	39K	5%	1/6W	
R053	1-247-879-00	CARBON	100K	5%	1/6W	
R055	1-247-891-00	CARBON	330K	5%	1/6W	
R056	1-247-859-00	CARBON	15K	5%	1/6W	
R057	1-247-873-00	CARBON	56K	5%	1/6W	
R058	1-247-871-00	CARBON	47K	5%	1/6W	
R059	1-247-843-00	CARBON	3.3K	5%	1/6W	
R060	1-247-873-00	CARBON	56K	5%	1/6W	
R061	1-247-821-00	CARBON	390	5%	1/6W	
R062	1-247-831-00	CARBON	1K	5%	1/6W	
R063	1-247-821-00	CARBON	390	5%	1/6W	
R064	1-247-825-00	CARBON	560	5%	1/6W	
R065	1-247-806-00	CARBON	91	5%	1/6W	
R066	1-247-807-00	CARBON	100	5%	1/6W	
R067	1-247-825-00	CARBON	560	5%	1/6W	
R068	1-247-803-00	CARBON	68	5%	1/6W	
R074	1-247-831-00	CARBON	1K	5%	1/6W	
R075	1-247-843-00	CARBON	3.3K	5%	1/6W	
R076	1-247-873-00	CARBON	39K	5%	1/6W	
R077 ⚠	1-246-998-00	CARBON	4.7	5%	1/4W	F
R078 ⚠	1-206-667-00	METAL OXIDE	1.3K	5%	2W	F
R079	1-247-817-00	CARBON	270	5%	1/6W	
R080	1-247-871-00	CARBON	47K	5%	1/6W	
R081 ⚠	1-247-033-00	CARBON	100	5%	1/8W	F

The components identified by shading and mark ⚠ are critical for safety. Replace only with part number specified.

When indicating parts by reference number, please include the board name.

Ref.No.	Part No.	Description				Remark
R082	1-247-863-00	CARBON	22K	5%	1/6W	
R083	1-247-803-00	CARBON	68	5%	1/6W	
R084	1-247-847-00	CARBON	4.7K	5%	1/6W	
R085	1-247-845-00	CARBON	3.9K	5%	1/6W	
R086	1-247-824-00	CARBON	510	5%	1/6W	
R087	1-247-823-00	CARBON	470	5%	1/6W	
R088	1-247-815-00	CARBON	220	5%	1/6W	
R091	1-247-867-00	CARBON	33K	5%	1/6W	
R092	1-247-863-00	CARBON	22K	5%	1/6W	
R501	1-247-867-00	CARBON	33K	5%	1/6W	
R502	1-247-867-00	CARBON	33K	5%	1/6W	
R503	1-247-877-00	CARBON	82K	5%	1/6W	
R504	1-247-867-00	CARBON	33K	5%	1/6W	
R505	1-247-867-00	CARBON	33K	5%	1/6W	
R506	1-247-839-00	CARBON	2.2K	5%	1/6W	
R507	1-247-887-00	CARBON	220K	5%	1/6W	
R508	1-247-835-00	CARBON	1.5K	5%	1/6W	
R509	1-247-848-00	CARBON	5.1K	5%	1/6W	
R510	1-247-859-00	CARBON	15K	5%	1/6W	
R511	1-247-827-00	CARBON	680	5%	1/6W	
R512	1-247-844-00	CARBON	3.6K	5%	1/6W	
R513	1-247-863-00	CARBON	22K	5%	1/6W	
R514	1-247-859-00	CARBON	15K	5%	1/6W	
R515	1-247-855-00	CARBON	10K	5%	1/6W	
R517	1-247-847-00	CARBON	4.7K	5%	1/6W	
R518	1-247-855-00	CARBON	10K	5%	1/6W	
R519	1-247-863-00	CARBON	22K	5%	1/6W	
R520	1-247-811-00	CARBON	150	5%	1/6W	
R521	1-247-858-00	CARBON	13K	5%	1/6W	
R522	1-247-887-00	CARBON	220K	5%	1/6W	
R523	1-247-851-00	CARBON	6.8K	5%	1/6W	
R524	1-247-831-00	CARBON	1K	5%	1/6W	
R525	1-247-843-00	CARBON	3.3K	5%	1/6W	
R526	1-247-875-00	CARBON	68K	5%	1/6W	
R529	1-247-875-00	CARBON	68K	5%	1/6W	
R530	1-247-855-00	CARBON	10K	5%	1/6W	
R531 ⚠	1-212-869-00	FUSIBLE	33	5%	1/4W	F
R532 ⚠	1-246-980-00	CARBON	3.3	5%	1/8W	F
R533	1-247-863-00	CARBON	22K	5%	1/6W	
R534	1-247-847-00	CARBON	4.7K	5%	1/6W	
R535	1-247-875-00	CARBON	68K	5%	1/6W	
R536	1-247-875-00	CARBON	68K	5%	1/6W	
R539	1-247-783-00	CARBON	10	5%	1/6W	
R540	1-247-819-00	CARBON	330	5%	1/6W	
R541	1-247-863-00	CARBON	22K	5%	1/6W	
R542	1-247-843-00	CARBON	3.3K	5%	1/6W	
R543	1-247-863-00	CARBON	22K	5%	1/6W	
R544	1-247-859-00	CARBON	15K	5%	1/6W	
R550	1-247-863-00	CARBON	22K	5%	1/6W	
R551	1-247-863-00	CARBON	22K	5%	1/6W	
R552	1-247-863-00	CARBON	22K	5%	1/6W	
R553	1-247-851-00	CARBON	6.8K	5%	1/6W	
R554	1-247-855-00	CARBON	10K	5%	1/6W	

Ref.No.	Part No.	Description				Remark
R558	1-247-843-00	CARBON	3.3K	5%	1/6W	
R559	1-247-845-00	CARBON	3.9K	5%	1/6W	
R561	1-247-867-00	CARBON	33K	5%	1/6W	
R562	1-247-839-00	CARBON	2.2K	5%	1/6W	
R803	1-247-863-00	CARBON	22K	5%	1/6W	
R804	1-247-863-00	CARBON	22K	5%	1/6W	
R805	1-247-855-00	CARBON	10K	5%	1/6W	
R808	1-247-855-00	CARBON	10K	5%	1/6W	
R809	1-246-473-00	CARBON	1K	5%	1/4W	
R810	1-247-855-00	CARBON	10K	5%	1/6W	
R811	1-246-473-00	CARBON	1K	5%	1/4W	
R814	1-247-855-00	CARBON	10K	5%	1/6W	
R815	1-246-473-00	CARBON	1K	5%	1/4W	
R816	1-246-497-00	CARBON	10K	5%	1/4W	
R817	1-246-497-00	CARBON	10K	5%	1/4W	
R818	1-246-497-00	CARBON	10K	5%	1/4W	
R819	1-246-497-00	CARBON	10K	5%	1/4W	
R820	1-246-497-00	CARBON	10K	5%	1/4W	
R821	1-246-473-00	CARBON	1K	5%	1/4W	
R822	1-246-473-00	CARBON	1K	5%	1/4W	
R823	1-247-879-00	CARBON	100K	5%	1/6W	
R824	1-247-874-00	CARBON	62K	5%	1/6W	
R825	1-247-855-00	CARBON	10K	5%	1/6W	
R826	1-246-521-00	CARBON	100K	5%	1/4W	
R827	1-247-867-00	CARBON	33K	5%	1/6W	
R828	1-247-886-00	CARBON	200K	5%	1/6W	
R829	1-247-872-00	CARBON	51K	5%	1/6W	
R830	1-247-874-00	CARBON	62K	5%	1/6W	
R831	1-247-868-00	CARBON	36K	5%	1/6W	
R832	1-247-869-00	CARBON	39K	5%	1/6W	
R833	1-247-879-00	CARBON	100K	5%	1/6W	
R834	1-247-903-00	CARBON	1M	5%	1/6W	
R835	1-246-509-00	CARBON	33K	5%	1/4W	
R836	1-246-505-00	CARBON	22K	5%	1/4W	
R837	1-247-827-00	CARBON	680	5%	1/6W	
R838	1-247-843-00	CARBON	3.3K	5%	1/6W	
R839	1-247-863-00	CARBON	22K	5%	1/6W	
R840	1-247-879-00	CARBON	100K	5%	1/6W	
R841	1-247-855-00	CARBON	10K	5%	1/6W	
R842	1-247-855-00	CARBON	10K	5%	1/6W	
R843	1-247-855-00	CARBON	10K	5%	1/6W	
R844	1-247-863-00	CARBON	22K	5%	1/6W	
R845	1-247-863-00	CARBON	10K	5%	1/6W	
R846	1-247-863-00	CARBON	22K	5%	1/6W	
R847	1-247-863-00	CARBON	10K	5%	1/6W	

VARIABLE RESISTOR

RV001	1-228-747-00	RES, ADJ, CARBON 4.7K
RV002	1-228-747-00	RES, ADJ, CARBON 4.7K
RV501	1-224-256-XX	RES, ADJ, METAL GLAZE 220K
RV502	1-228-748-00	RES, ADJ, CARBON 10K
RV503	1-228-747-00	RES, ADJ, CARBON 4.7K

The components identified by shading and mark ⚠ are critical for safety. Replace only with part number specified.

When indicating parts by reference number, please include the board name.

TA-15 CS-3 CS-4 N LM-8 RD-6 RD-7 TM-48

Ref.No.	Part No.	Description				Remark
		FILTER				
SF001	1-404-323-00	SAWF (38.9MHZ)				
		SWITCH				
SW001	1-516-226-00	SLIDE SWITCH				
		TRANSFORMER				
T002	1-404-404-00	COIL, VIF				
T003	1-404-182-00	COIL, VIF				
T004	1-404-389-00	COIL, SIF				
T006	1-404-124-21	SIFT				
T008	1-404-182-00	COIL, VIF				
T501	1-433-237-00	TRANSFORMER, OSCILLATOR				
		CRYSTAL				
X801	1-567-121-00	VIBRATOR, CRYSTAL				
**********						
♠:	1-609-227-00	CS-3 BOARD **********				
		CONNECTOR				
CN301♠:	1-564-029-00	PIN, CONNECTOR 4P				
		SWITCH				
S301	1-554-241-00	SWITCH, LEVER				
**********						
♠:	1-609-228-00	CS-4 BOARD **********				
		SWITCH				
S302	1-554-241-00	SWITCH, LEVER				
**********						
♠:	1-606-794-00	N BOARD *******				
		CAPACITOR				
C001	1-123-617-00	ELECT	10MF	20%	16V	
C002	1-123-617-00	ELECT	10MF	20%	16V	
C003	1-123-617-00	ELECT	10MF	20%	16V	
C004	1-161-019-00	CERAMIC	0.033MF	10%	25V	
C005	1-108-567-00	MYLAR	0.0033MF	5%	50V	
C006	1-123-821-00	ELECT	47MF	20%	16V	
		DIODE				
D001	8-719-110-32	DIODE PH302B				

Ref.No.	Part No.	Description				Remark
		IC				
IC001	8-759-113-73	IC UPC1373H				
		COIL				
L001	1-404-310-00	COIL				
**********						
♠:	1-605-071-00	LM-8 BOARD **********				
		CAPACITOR				
C101	1-161-057-00	CERAMIC	0.033MF	10%	50V	
C102	1-161-057-00	CERAMIC	0.033MF	10%	50V	
		COIL				
L101	1-408-120-00	MICRO INDUCTOR 18UH				
L102	1-408-120-00	MICRO INDUCTOR 18UH				
		RESISTOR				
R101 ⚠	1-206-479-00	METAL OXIDE	[illegible]	5%	[illegible]	
**********						
♠:	1-610-401-00	RD-6 BOARD **********				
♠:	3-681-157-00	HOLDER, RD				
		DIODE				
D001	=>8-719-921-03	DIODE GP-2S02B				
**********						
♠:	1-610-402-00	RD-7 BOARD **********				
		DIODE				
D001	=>8-719-921-03	DIODE GP-2S02B				
**********						
♠:	1-611-069-00	TM-48 BOARD **********				
♠:	3-682-650-00	HOUSE, INDICATION LAMP				
		DIODE				
D014	8-719-908-54	DIODE SLR-54VC3				
D015	8-719-911-19	DIODE 1SS119				
D016	8-719-911-19	DIODE 1SS119				
D017	8-719-908-54	DIODE SLR-54VC3				
D018	8-719-908-54	DIODE SLR-54VC3				
D019	8-719-908-49	DIODE SLR-34YC3				

The components identified by shading and mark ⚠ are critical for safety. Replace only with part number specified.

When indicating parts by reference number, please include the board name.

Ref.No.	Part No.	Description				Remark
D020	8-719-908-49	DIODE SLR-34YC3				
D021	8-719-911-19	DIODE 1SS119				
		INDICATOR TUBE				
FL001	1-519-305-00	INDICATOR TUBE, FLUORESCENT				
		LAMP				
PL001	1-518-544-11	LAMP, PILOT				
PL002	1-518-544-11	LAMP, PILOT				
PL003	1-518-544-11	LAMP, PILOT				
		TRANSISTOR				
Q012	8-729-245-83	TRANSISTOR 2SC2458				
Q013	8-729-245-83	TRANSISTOR 2SC2458				
Q014	8-729-245-83	TRANSISTOR 2SC2458				
Q015	8-729-245-83	TRANSISTOR 2SC2458				
		RESISTOR				
R043	1-247-819-00	CARBON	330	5%	1/6W	
R044	1-247-863-00	CARBON	22K	5%	1/6W	
R045	1-247-863-00	CARBON	22K	5%	1/6W	
R046	1-247-819-00	CARBON	330	5%	1/6W	
R047	1-247-819-00	CARBON	330	5%	1/6W	
R048	1-247-819-00	CARBON	330	5%	1/6W	
R049	1-247-863-00	CARBON	22K	5%	1/6W	
R050	1-247-863-00	CARBON	22K	5%	1/6W	
R051	1-247-863-00	CARBON	22K	5%	1/6W	
R052	1-247-863-00	CARBON	22K	5%	1/6W	
		SWITCH				
S014	1-554-088-00	SWITCH, KEY BOARD				
S015	1-553-997-00	SWITCH, KEY BOARD				
S016	1-553-997-00	SWITCH, KEY BOARD				

****

♠:1-611-070-00 TM-49 BOARD
****

Ref.No.	Part No.	Description				Remark
		DIODE				
D009	8-719-911-19	DIODE 1SS119				
D010	8-719-911-19	DIODE 1SS119				
D011	8-719-911-19	DIODE 1SS119				
		RESISTOR				
R039	1-247-879-00	CARBON	100K	5%	1/6W	
R040	1-247-879-00	CARBON	100K	5%	1/6W	
R041	1-247-879-00	CARBON	100K	5%	1/6W	
R042	1-247-879-00	CARBON	100K	5%	1/6W	
		SWITCH				
S001	1-553-997-00	SWITCH, KEY BOARD				
S002	1-553-997-00	SWITCH, KEY BOARD				
S003	1-553-997-00	SWITCH, KEY BOARD				
S004	1-553-997-00	SWITCH, KEY BOARD				
S005	1-553-997-00	SWITCH, KEY BOARD				
S006	1-553-997-00	SWITCH, KEY BOARD				
S007	1-553-997-00	SWITCH, KEY BOARD				
S008	1-553-997-00	SWITCH, KEY BOARD				
S009	1-553-997-00	SWITCH, KEY BOARD				
S010	1-553-997-00	SWITCH, KEY BOARD				
S011	1-553-997-00	SWITCH, KEY BOARD				
S013	1-554-625-21	SWITCH, SLIDE				

****

♠:1-611-068-00 TR-13 BOARD
****

Ref.No.	Part No.	Description				Remark
		TRANSISTOR				
Q001	8-719-316-16	TRANSISTOR 2SC1061				

****

♠:1-611-071-00 FU-19 BOARD
****

♠:3-679-381-00 PLATE, LIGHT GUIDE
♠:3-682-645-00 HOUSE, LAMP

Ref.No.	Part No.	Description				Remark
		DIODE				
D001	8-719-908-53	DIODE SLR-54DC3				
D002	8-719-908-50	DIODE SLR-54MC3				
		LAMP				
PL001	1-518-546-21	LAMP, PILOT				
PL002	1-518-546-41	LAMP, PILOT				
PL003	1-518-546-21	LAMP, PILOT				
PL004	1-518-546-31	LAMP, PILOT				
PL005	1-518-545-00	LAMP, PILOT				
		TRANSISTOR				
Q001	=>8-729-245-83	TRANSISTOR 2SC2458				
Q002	=>8-729-245-83	TRANSISTOR 2SC2458				
Q003	=>8-729-245-83	TRANSISTOR 2SC2458				
Q004	=>8-729-245-83	TRANSISTOR 2SC2458				
		RESISTOR				
R001	1-247-839-00	CARBON	2.2K	5%	1/6W	
R002	1-247-839-00	CARBON	2.2K	5%	1/6W	
R003	1-247-839-00	CARBON	2.2K	5%	1/6W	
R004	1-247-839-00	CARBON	2.2K	5%	1/6W	
R005	1-247-855-00	CARBON	10K	5%	1/6W	
R006	1-247-855-00	CARBON	10K	5%	1/6W	
R007	1-247-855-00	CARBON	10K	5%	1/6W	
R008	1-247-855-00	CARBON	10K	5%	1/6W	
R009	1-247-831-00	CARBON	1K	5%	1/6W	
R010	1-246-467-00	CARBON	560	5%	1/4W	
R011	1-247-831-00	CARBON	1K	5%	1/6W	

When indicating parts by reference number, please include the board name.

FU-19 FU-20 VR-3 POWER BLOCK(SR-15)

Ref.No.	Part No.	Description				Remark
R012	1-247-822-00	CARBON	430	5%	1/6W	
R013	1-247-831-00	CARBON	1K	5%	1/6W	
R014	1-247-831-00	CARBON	1K	5%	1/6W	

SWITCH

S001	1-553-997-00	SWITCH, KEY BOARD
S002	1-553-997-00	SWITCH, KEY BOARD
S003	1-553-997-00	SWITCH, KEY BOARD
S004	1-553-997-00	SWITCH, KEY BOARD
S005	1-553-997-00	SWITCH, KEY BOARD
S006	1-553-997-00	SWITCH, KEY BOARD
S007	1-553-997-00	SWITCH, KEY BOARD

****

♠:1-611-072-00 FU-20 BOARD
****

JACK

CNJ001	1-507-588-32	PIN JACK, 1P
CNJ002	1-557-041-00	CONNECTOR ASSY, BNC
CNJ003	1-507-840-00	JACK, MINIATURE

RESISTOR

R001	1-247-804-00	CARBON	75	5%	1/6W	

****

♠:1-611-073-00 VR-3 BOARD
****

VARIABLE RESISTOR

RV001	1-230-122-00	RES, VAR, CARBON 100K
RV002	1-226-234-00	RES, ADJ, CARBON 2K

****

POWER BLOCK (SR-15)
****

⚠.1-413-161-11 POWER BLOCK (SR-15) INCLUDE D, C, R BOARDS
♠:1-611-044-00 M BOARD

CAPACITOR

C601	⚠ 1-110-085-00	METALLIZED-POLYESTER	0.22MF	AC250V
C602	⚠.1-161-742-00	CERAMIC	0.0022MF	AC400V
C603	⚠.1-161-742-00	CERAMIC	0.0022MF	AC400V
C604	⚠.1-161-742-00	CERAMIC	0.0022MF	AC400V
C605	⚠.1-161-742-00	CERAMIC	0.0022MF	AC400V
C606	⚠.1-161-743-00	CERAMIC	0.0047MF	AC400V
C607	⚠.1-161-743-00	CERAMIC	0.0047MF	AC400V
C608	⚠.1-125-311-00	ELECT	220MF	400V
C609	⚠.1-124-023-00	ELECT	4.7MF	350V
C610	⚠.1-124-023-00	ELECT	4.7MF	350V
C611	1-124-162-00	ELECT	47MF	10V
C612	1-124-162-00	ELECT	47MF	10V
C621	1-108-413-00	POLYESTER	0.0022MF	200V
C622	1-108-413-00	POLYESTER	0.0022MF	200V
C623	1-161-910-00	CERAMIC	390PF	500V
C624	1-161-910-00	CERAMIC	390PF	500V
C625	1-124-344-00	ELECT	22MF	100V
C626	1-108-377-00	POLYESTER	0.01MF	100V
C627	1-161-915-00	CERAMIC	0.001MF	500V
C628	1-130-510-00	POLYESTER	0.01MF	50V
C629	1-130-520-00	POLYESTER	0.022MF	50V
C630	1-123-974-00	ELECT	2200MF	16V
C631	1-123-985-00	ELECT KM	1000MF	16V
C632	1-123-324-00	ELECT	1000MF	16V
C633	1-123-323-00	ELECT	470MF	16V
C634	1-123-323-00	ELECT	470MF	16V
C635	1-130-516-00	POLYESTER	0.01MF	50V

CONNECTOR

CN601♠	1-560-893-00	PIN CONNECTOR 5P
CN602♠	1-560-895-00	PIN CONNECTOR 7P
CN603♠	1-560-891-00	PIN CONNECTOR 3P
CN604♠	1-560-891-00	PIN CONNECTOR 3P
CN605♠	1-560-891-00	PIN CONNECTOR 3P
CN606♠	1-560-891-00	PIN CONNECTOR 3P
CN607♠	1-560-896-00	PIN CONNECTOR 8P

DIODE

D601	⚠.8-719-503-06	DIODE S3WB60Z
D602	8-719-101-47	DIODE RD4.7EL2
D603	8-719-101-47	DIODE RD4.7EL2
D621	8-719-908-00	DIODE ESAC33-02CS
D622	8-719-900-93	DIODE V09C
D623	8-719-920-76	DIODE 1S2076
D624	8-719-100-61	DIODE RD11EB2
D625	8-719-923-76	DIODE 1S2076A
D626	8-719-920-76	DIODE 1S2076
D627	8-719-101-67	DIODE RD7.5EL2
D628	8-719-100-23	DIODE RD4.3EB2
D629	8-719-100-23	DIODE RD4.3EB2
D630	8-719-920-76	DIODE 1S2076
D631	8-719-100-30	DIODE RD5.1EB2
D632	8-719-920-76	DIODE 1S2076
D633	8-719-920-76	DIODE 1S2076
D634	8-719-815-55	DIODE 1S1555

FUSE

F601	⚠.1-532-237-11	TIME LAG 3.15A 250V

COIL

L601	⚠.1-421-481-21	LFT
L621	1-408-814-11	CHOKE
L622	1-421-421-21	100MH

The components identified by shading and mark ⚠ are critical for safety. Replace only with part number specified.

When indicating parts by reference number, please include the board name.

Ref.No.	Part No.	Description		Remark
L623	1-421-465-21	68MH		
L624	1-421-459-21	5.6MH		
L625	1-421-459-21	5.6MH		
		TRANSISTOR		
Q601 ⚠	8-729-104-64	TRANSISTOR 2SC3158		
Q602 ⚠	8-729-104-64	TRANSISTOR 2SC3158		
Q603	8-729-102-03	TRANSISTOR 2SD1020		
Q604	8-729-102-03	TRANSISTOR 2SD1020		
Q621	8-729-306-72	TRANSISTOR 2SD667A		
Q622	8-729-103-43	TRANSISTOR 2SB734		
Q623	8-729-188-23	TRANSISTOR 2SD882		
Q624	8-729-217-33	TRANSISTOR 2SC1173		
Q625	8-729-117-54	TRANSISTOR 2SA1175		
		RESISTOR		
R601 ⚠	1-217-292-11	WIRE WOUND	3.3	5W F
R602	1-244-929-00	CARBON	220K	1/2W
R603	1-247-937-00	CARBON	15K	1/4W
R604	1-244-929-00	CARBON	220K	1/2W
R605	1-247-937-00	CARBON	15K	1/4W
R606 ⚠	1-212-945-00	FUSIBLE	3.3	1/2W F
R607 ⚠	1-212-945-00	FUSIBLE	3.3	1/2W F
R608	1-246-449-00	CARBON	100	1/4W
R609	1-246-449-00	CARBON	100	1/4W
R621 ⚠	1-206-475-00	METAL FILM	33	2W F
R622 ⚠	1-247-923-00	CARBON	8.2	1/4W F
R623	1-535-363-00	SHUNT	0.02	2W
R624 ⚠	1-212-151-00	METAL FILM	0.22	1W F
R625	1-246-473-00	CARBON	1K	1/4W
R626	1-246-485-00	CARBON	3.3K	1/4W
R627	1-246-485-00	CARBON	3.3K	1/4W
R628	1-246-473-00	CARBON	1K	1/4W
R629	1-246-453-00	CARBON	150	1/4W
R630	1-246-429-00	CARBON	15	1/4W
R631 ⚠	1-205-698-00	CEMENT	3.3	5W F
R632	1-246-455-00	CARBON	180	1/4W
R633 ⚠	1-205-731-00	CEMENT	12	5W F
R634	1-246-469-00	CARBON	680	1/4W
R635	1-247-601-00	CARBON	5.1K	1/4W
R636	1-247-601-00	CARBON	5.1K	1/4W
R637 ⚠	1-246-449-00	CARBON	100	1/4W
		RELAY		
RY621	1-515-462-21	DC12V		
		TRANSFORMER		
T601 ⚠	1-447-677-00	CONV.T		
T602	1-437-120-00	DR.T		

Ref.No.	Part No.	Description		Remark
♠	A-4925-029-A	C BOARD, COMPLETE		
		**********		
		CAPACITOR		
C651	1-123-333-00	ELECT	100MF	16V
C652	1-130-027-00	POLY-PRO	0.0056MF	50V
C653	1-130-022-00	POLY-PRO	0.022MF	50V
C654	1-130-524-00	POLYESTER	0.047MF	50V
C655	1-123-318-00	ELECT	33MF	16V
		DIODE		
D651	8-719-200-01	DIODE 10E-1		
D652	8-719-100-67	DIODE RD13EB1		
		IC		
IC651	8-759-937-59	IC MB3759		
		RESISTOR		
R651	1-246-485-00	CARBON	3.3K	1/4W
R652	1-246-473-00	CARBON	1K	1/4W
R653	1-246-491-00	CARBON	5.6K	1/4W
R654	1-246-465-00	CARBON	470	1/4W
R655	1-246-487-00	CARBON	3.9K	1/4W
R656	1-246-481-00	CARBON	2.2K	1/4W
R656	1-246-480-00	CARBON	2K	1/4W
R656	1-246-482-00	CARBON	2.4K	1/4W
R657	1-246-503-00	CARBON	18K	1/4W
R658	1-246-509-00	CARBON	33K	1/4W
R659	1-246-465-00	CARBON	470	1/4W
R660	1-246-481-00	CARBON	2.2K	1/4W
		VARIABLE RESISTOR		
RV651	1-228-141-00	METAL GLAZE 500		
♠	A-4925-030-A	D BOARD, COMPLETE		
		**********		
		CAPACITOR		
C671	1-123-332-00	ELECT	47MF	16V
C672	1-123-333-00	ELECT	100MF	16V
C673	1-130-508-00	POLYESTER	0.0022MF	50V
C674	1-130-508-00	POLYESTER	0.0022MF	50V
C675	1-130-514-00	POLYESTER	0.0068MF	50V
C676	1-130-514-00	POLYESTER	0.0068MF	50V
C677	1-130-508-00	POLYESTER	0.0022MF	50V
C678	1-130-508-00	POLYESTER	0.0022MF	50V
C679	1-130-777-00	METAL-POLY	0.22MF	100V
C680	1-130-777-00	METAL-POLY	0.22MF	100V
C681	1-130-777-00	METAL-POLY	0.22MF	100V
C682	1-130-777-00	METAL-POLY	0.22MF	100V
C683	1-123-357-00	ELECT	22MF	50V

The components identified by shading and mark ⚠ are critical for safety. Replace only with part number specified.

When indicating parts by reference number, please include the board name.

POWER BLOCK (SR-15S)

Ref.No.	Part No.	Description		Remark
C684	1-123-359-00	ELECT	47MF	50V
C685	1-123-357-00	ELECT	22MF	50V
C686	1-123-359-00	ELECT	47MF	50V
		DIODE		
D671	8-719-923-76	DIODE 1S2076A		
D672	8-719-923-76	DIODE 1S2076A		
D673	8-719-923-48	DIODE 1S2348H		
D674	8-719-923-48	DIODE 1S2348H		
		COIL		
L671	1-421-421-00			
L672	1-408-457-00			
L673	1-408-457-00			
L674	1-408-439-00			
		TRANSISTOR		
Q671	8-729-177-00	TRANSISTOR 2SD774		
Q672	8-729-177-00	TRANSISTOR 2SD774		
		RESISTOR		
R671	1-247-863-00	CARBON	22K	1/6W
R672	1-247-863-00	CARBON	22K	1/6W
R673	1-247-807-00	CARBON	100	1/6W
R674	1-247-807-00	CARBON	100	1/6W
[redacted]				
R676	1-246-441-00	CARBON	47	1/4W
R677	1-246-505-00	CARBON	22K	1/4W
		TRANSFORMER		
T671	1-447-678-00	CONV.T		

♣:A-4925-031-A R BOARD, COMPLETE
****

		CAPACITOR		
C691	1-124-496-00	ELECT	22MF	35V
C692	1-123-308-00	ELECT	220MF	10V
C693	1-123-321-00	ELECT	220MF	16V
		DIODE		
D691	8-719-100-23	DIODE RD4.3EB2		
D692	8-719-815-55	DIODE 1S1555		
D693	8-719-100-38	DIODE RD6.2EB2		
		TRANSISTOR		
Q691	8-729-178-54	TRANSISTOR 2SC2785		
Q692	8-729-117-54	TRANSISTOR 2SA1175		
Q693	8-729-178-54	TRANSISTOR 2SC2785		
		RESISTOR		
R691	1-247-934-00	CARBON	8.2K	1/4W
R692	1-247-600-00	CARBON	4.7K	1/4W
R693	1-247-967-00	CARBON	13K	1/4W
R694	1-247-931-00	CARBON	1.5K	1/4W
R695	1-246-489-00	CARBON	4.7K	1/4W
R696	1-246-497-00	CARBON	10K	1/4W
R697	1-246-481-00	CARBON	2.2K	1/4W
R698	1-247-930-00	CARBON	1.2K	1/4W
R699	1-246-484-00	CARBON	3K	1/4W
		VARIABLE RESISTOR		
RV691	1-228-257-00	METAL-GLAZE 2K		

****

POWER BLOCK (SR-15S)
****

	9-983-637-01	INSULATOR SHEET A
	9-983-638-01	INSULATOR SHEET B
	9-983-639-01	INSULATOR SHEET C
	9-983-640-01	INSULATOR SHEET D
♣	9-983-631-01	FUSE, HOLDER
♣	9-983-632-01	ANGLE

		CAPACITOR		
[redacted]				
C011	9-983-620-01	CERAMIC	0.001MF	1KV
C012	1-108-591-00	FILM	0.033MF	50V
C013	1-108-591-00	FILM	0.033MF	50V
C014	1-123-323-00	ELECT	330MF	16V
C015	9-983-621-01	CERAMIC	0.3MF	12V
C016	1-161-772-00	CERAMIC	0.1MF	16V
C017	1-108-555-00	FILM	0.001MF	50V
C018	1-102-114-00	CERAMIC	0.00047MF	50V
C019	1-108-579-00	FILM	0.01MF	50V
C020	1-108-575-00	FILM	0.0068MF	50V
C022	1-161-915-00	CERAMIC	0.001MF	500V
C023	1-161-915-00	CERAMIC	0.001MF	500V
C024	1-161-915-00	CERAMIC	0.001MF	500V
C025	1-123-326-00	ELECT	3300MF	16V
C026	1-123-323-00	ELECT	470MF	16V
C027	1-123-325-00	ELECT	2200MF	16V

The components identified by shading and mark ⚠ are critical for safety. Replace only with part number specified.

When indicating parts by reference number, please include the board name.

POWER BLOCK (SR-15S)

Ref.No.	Part No.	Description		Remark
C028	1-108-591-00	FILM	0.033MF	50V
C029	1-123-323-00	ELECT	470MF	16V
C030	1-123-326-00	ELECT	3300MF	16V
C031	1-161-772-00	CERAMIC	0.1MF	16V
C032	1-123-307-00	ELECT	100MF	10V
C033	1-161-772-00	CERAMIC	0.1MF	16V
C034	1-123-307-00	ELECT	100MF	10V
[redacted]				
C050	1-123-320-00	ELECT	100MF	16V
C051	1-123-316-00	ELECT	10MF	16V
C052	1-108-575-00	FILM	0.0068MF	50V
C053	1-161-772-00	CERAMIC	0.1MF	16V
C054	1-161-772-00	CERAMIC	0.1MF	16V
C055	9-983-622-01	CERAMIC	100PF	500V
C056	1-123-359-00	ELECT	47MF	50V
C057	1-123-356-00	ELECT	10MF	50V
C058	1-123-343-00	ELECT	33MF	35V
C059	1-123-343-00	ELECT	33MF	35V

CONNECTOR

CN601♠	1-560-893-00	PIN CONNECTOR 5P	
CN602♠	1-560-895-00	PIN CONNECTOR 7P	
CN603♠	1-560-891-00	PIN CONNECTOR 3P	
CN604♠	1-560-891-00	PIN CONNECTOR 3P	
CN605♠	1-560-891-00	PIN CONNECTOR 3P	
CN606♠	1-560-891-00	PIN CONNECTOR 3P	
CN607♠	1-560-896-00	PIN CONNECTOR 8P	

DIODE

D001	9-983-609-01	DIODE RB156	
[redacted]			
D005	=>8-719-815-55	DIODE 1S1585	
D006	=>8-719-815-55	DIODE 1S1585	
D007	=>8-719-815-55	DIODE 1S1585	
D008	8-719-912-52	DIODE ESAC25-02C	
D009	=>8-719-815-55	DIODE 1S1585	
[redacted]			
D050	=>8-719-815-55	DIODE 1S1585	
D051	9-983-610-01	DIODE ES1A	
D052	9-983-610-01	DIODE ES1A	
ZD001	8-719-904-44	ZENER EQA02-10B	
ZD002	8-719-100-22	ZENER RD4.3EB1	
ZD050	8-719-903-90	ZENER EQA02-05F	
ZD051	8-719-904-68	ZENER EQA02-20B	

FUSE

[redacted]			

IC

IC001	8-759-964-94	IC TL494CN	
IC002	9-983-616-01	IC UPC7809	
IC003	8-759-171-05	IC UPC7805H	

COIL

L001	9-983-601-01	LFT	
L002	9-983-600-01	CHOCK	
L003	9-983-604-01	23MH	
L004	9-983-605-01	20MH	
L005	9-983-612-01	300MH	
[redacted]			
L050	9-983-613-01	220MH	
L051	9-983-613-01	220MH	
L052	9-983-614-01	22MH	
L053	9-983-615-01	560MH	
L054	9-983-615-01	560MH	

TRANSISTOR

Q001	8-729-954-22	TRANSISTOR	2SC2452-04
Q002	8-729-954-22	TRANSISTOR	2SC2452-04
Q003	8-729-288-02	TRANSISTOR	2SD880
Q004	8-729-312-12	TRANSISTOR	2SC1213C
Q005	8-729-312-12	TRANSISTOR	2SC1213C
Q006	=>8-729-374-02	TRANSISTOR	2SB740
Q050	9-983-607-01	TRANSISTOR	2SC3328
Q051	=>8-729-374-02	TRANSISTOR	2SB740

RESISTOR

[redacted]				
R002	1-246-473-00	CARBON	1K	1/4W
R003	1-246-459-00	CARBON	270	1/4W
R004	1-246-459-00	CARBON	270	1/4W
R005	1-202-657-00	SOLID	3.3M	1/2W
R006	1-202-657-00	SOLID	3.3M	1/2W
R007	1-246-401-00	CARBON	1	1/4W
R008	1-246-449-00	CARBON	100	1/4W
R009	1-246-401-00	CARBON	1	1/4W
R010	1-246-449-00	CARBON	100	1/4W
[redacted]				
R012	1-246-401-00	CARBON	1	1/4W
R013	1-244-885-00	CARBON	3.3K	1/2W
R014	1-246-457-00	CARBON	220	1/4W
R015	1-246-461-00	CARBON	330	1/4W
R016	1-246-461-00	CARBON	330	1/4W
R017	1-246-489-00	CARBON	4.7K	1/4W
R018	1-246-455-00	CARBON	180	1/4W
R019	1-246-489-00	CARBON	4.7K	1/4W
R020	1-246-491-00	CARBON	5.6K	1/4W
R021	9-983-624-01	CARBON	2M	1/4W
R022	1-246-489-00	CARBON	4.7K	1/4W
R023	1-246-482-00	CARBON	2.4K	1/4W

The components identified by shading and mark ⚠ are critical for safety. Replace only with part number specified.

When indicating parts by reference number, please include the board name.

POWER BLOCK (SR-15S)

Ref.No.	Part No.	Description			Remark
R024	1-246-515-00	CARBON	56K	1/4W	
R025	1-246-491-00	CARBON	5.6K	1/4W	
R026	1-246-485-00	CARBON	3.3K	1/4W	
R027	1-246-501-00	CARBON	15K	1/4W	
R028 ⚠	1-212-881-00	FUSIBLE	100	1/4W	
R029	9-983-625-01		0.025		
R030	1-246-451-00	CARBON	120	1/4W	
R031 ⚠	1-246-455-00	CARBON	180	1/4W	
R032	1-246-503-00	CARBON	18K	1/4W	
R033	1-246-465-00	CARBON	470	1/4W	
R034	1-246-489-00	CARBON	4.7K	1/4W	
R035	1-246-505-00	CARBON	22K	1/4W	
R036	1-246-497-00	CARBON	10K	1/4W	
R050	1-246-489-00	CARBON	4.7K	1/4W	
R051	1-246-453-00	CARBON	150	1/4W	
R052	1-246-453-00	CARBON	150	1/4W	
R053	1-246-509-00	CARBON	33K	1/4W	
R054	1-246-447-00	CARBON	82	1/4W	
R055 ⚠	1-212-849-00	FUSIBLE	4.7	1/4W	

RELAY

RL001	9-983-617-01	RELAY

SCR

SCR1	8-719-104-17	2P5M

SPARK GAP

SG001	9-983-628-01	SPARK GAP
SG002	9-983-628-01	SPARK GAP

TRANSFORMER

T001 ⚠	9-983-598-01	POWER
T002	9-983-599-01	CONV.T
T003	9-983-600-01	DR.T
T050	9-983-601-01	CONV.T

VARIABLE RESISTOR

VR001	9-983-626-01	VARIABLE 1K
VR002	9-983-627-01	VARIABLE 500

****

MISCELLANEOUS
****

♦	A-4910-021-A	R STATOR BOARD, COMPLETE (REEL MOTOR BOARD)
	A-6761-065-A	ACE ASSY
⚠	1-613-160-11	POWER BLOCK (SR-15S)
⚠	1-613-161-11	POWER BLOCK (SR-15)
	1-454-348-00	SOLENOID, BRAKE PLUNGER
	1-454-349-41	SOLENOID, PLUNGER
	1-464-250-00	SENSOR, T COIL
	1-464-286-00	SENSOR, S COIL
⚠	1-464-289-00	BOOSTER MIXER, RF MODULATOR
⚠	1-534-817-12	POWER CORD
	1-541-163-00	MOTOR
♦	1-555-716-00	CABLE, PIN
	1-561-468-00	SOCKET, CONNECTOR (DIN8P)
	8-825-508-10	HEAD, FE
	8-838-027-11	MOTOR, DC (BHF-1901B)
S901	1-554-374-00	SWITCH, LEVER (REC PROOF)
S902	1-554-374-00	SWITCH, LEVER (CASSETTE IN)
S903	1-553-539-00	SWITCH, MICRO (LOADING END)
S904	1-553-718-00	SWITCH, MICRO (UNLOADING END)

****

ACCESSORIES AND PACKING MATERIALS
****

Part No.	Description	Remark
A-6765-205-A	COMMANDER ASSY (GOLD)	
A-6765-291-A	COMMANDER ASSY (SILVER)	
A-6765-292-A	COMMANDER ASSY (RED)	
3-682-684-01	INDIVIDUAL CARTON	
3-682-671-01	CUSHION (UPPER)	
3-682-672-01	CUSHION (LOWER)	
1-551-513-00	CABLE, COAXAL ASSY	
1-556-893-00	CORD ASSY, COAXIAL	
3-656-301-00	SCREWDRIVER, CONTROL	
3-660-986-00	SHEET, PROTECTION	
3-671-873-00	CASE, ACCESSORY	
3-675-581-00	LID, CASE, ACCESSORY	
3-681-190-00	SHEET (LARGE), PROTECTION	
3-682-686-00	COVER, DUST	
3-701-007-00	BAND, BINDING	
3-773-586-41	MANUAL, INSTRUCTION	

The components identified by shading and mark ⚠ are critical for safety. Replace only with part number specified.

When indicating parts by reference number, please include the board name.

RMT-218

SERVICE MANUAL

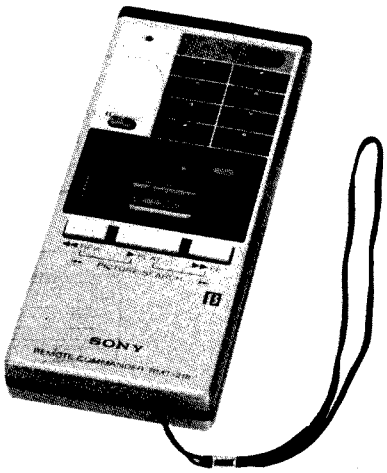

SPECIFICATIONS

Remote control system	Infrared control
Power requirements	3V dc, 2 IEC designation R6 batteries (size AA)
Dimensions	Approx. 65 × 20 × 153 mm (w/h/d) ($2^5/_8 \times {}^{13}/_{16} \times 6^1/_8$ inches) incl. projecting parts and controls
Weight	Approx. 140 g (5 oz) incl. batteries

REMOTE COMMANDER

SONY®

REMOTE CONTROL OPERATION

You can control almost all the functions of this video cassette recorder from your armchair using the supplied Remote Commander.

BATTERY INSERTION

1 Open the lid.

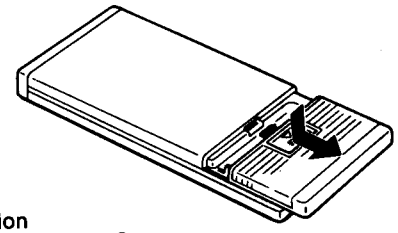

2 Insert two IEC designation R6 batteries (size AA) with correct polarity.

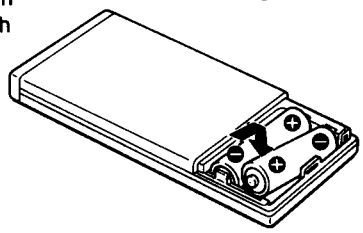

3 Close the lid firmly.

Notes on the Remote Commander

- Avoid dropping foreign objects into the cabinet, particularly when replacing batteries.
- Keep the Commander away from extremely hot or humid places.
- Avoid mechanical shock to the commander.
- This Commander may be used only with this video cassette recorder.

Battery life

In normal operation, batteries will last for about six months. If the range of the Remote Commander becomes noticeably short, replace the batteries with new ones. When the batteries are exhausted, the remote function indicator will not light when the buttons on the Commander are pressed.

If the Commander is not to be used for a long period of time, remove the batteries to avoid possible damage from battery leakage.

PREPARATION

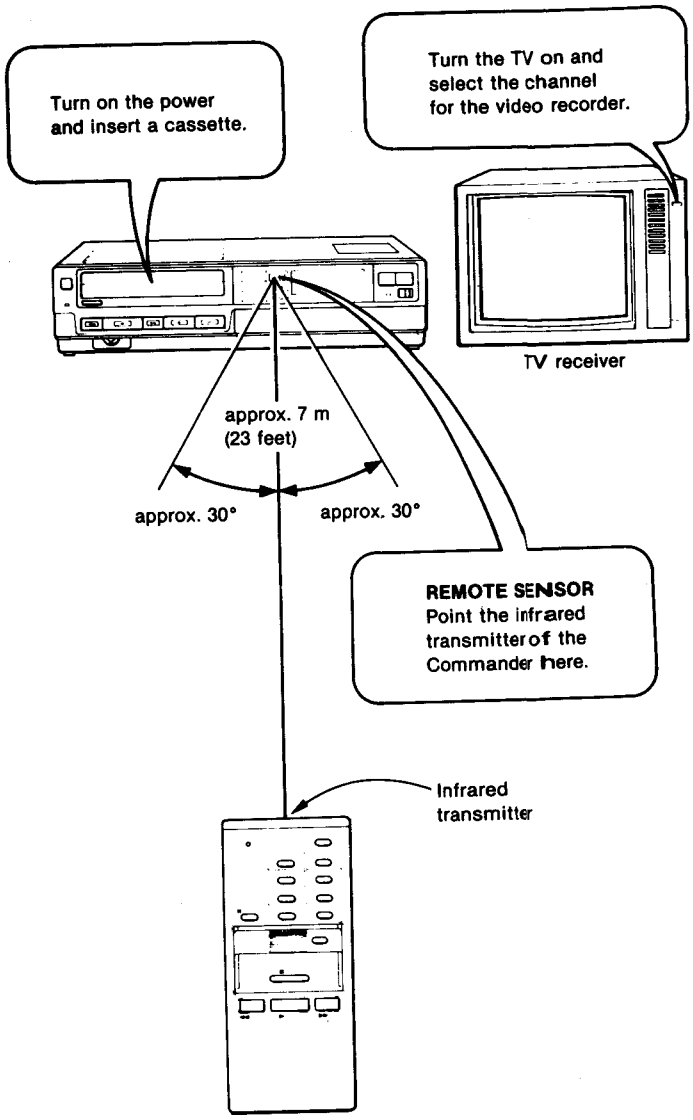

Notes

- There should be no obstacles between the Commander and the REMOTE SENSOR of the recorder.
- The shorter the distance between the Commander and the recorder, the wider the angle within which the recorder can be controlled.

FUNCTION OF THE BUTTONS

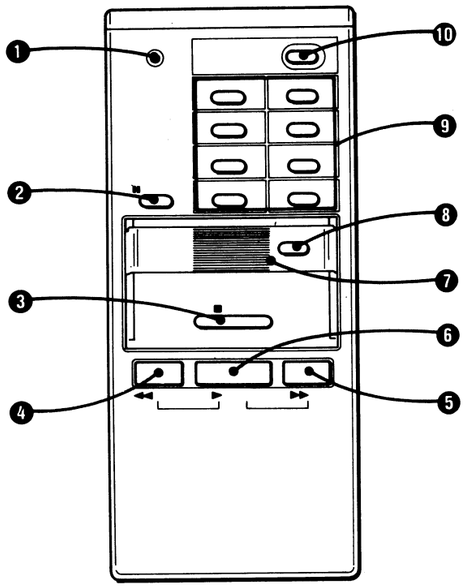

❶ Remote function indicator
Lights up when any of the buttons on the Commander are pressed.

❷ ❚❚ PAUSE button
Press to stop the tape momentarily. To resume the previous mode, press it again.

❸ ■ STOP button
Press to stop the tape.

❹ ◀◀ REW button
Press to rewind the tape. Used also for reverse picture search operation during playback and for skip scan operation during rewinding.

❺ ▶▶ FF button
Press to advance the tape rapidly. Used also for forward picture search operation during playback and for skip scan operation during fast forward mode.

❻ ▶ PLAY button
Press to play the tape back.

❼ Sliding cover
During playback, slide this cover over the record button to prevent accidental recording. During recording, slide this cover down to prevent accidental interruption of recording.

❽ ● REC button
Press to start recording.

❾ Channel select buttons
Press to select a channel to be viewed or to be recorded.

❿ ON button
Press to turn the power on. To turn it off, press again.

OPERATION

Recording
1 Select the channel to be recorded with the channel select button.
2 Press the ● REC button. The recording will begin.
To stop recording, press the ■ STOP button.

Playback
Press the ▶ PLAY button. Playback will begin.
To stop playback, press the ■ STOP button.

2. SCHEMATIC DIAGRAM

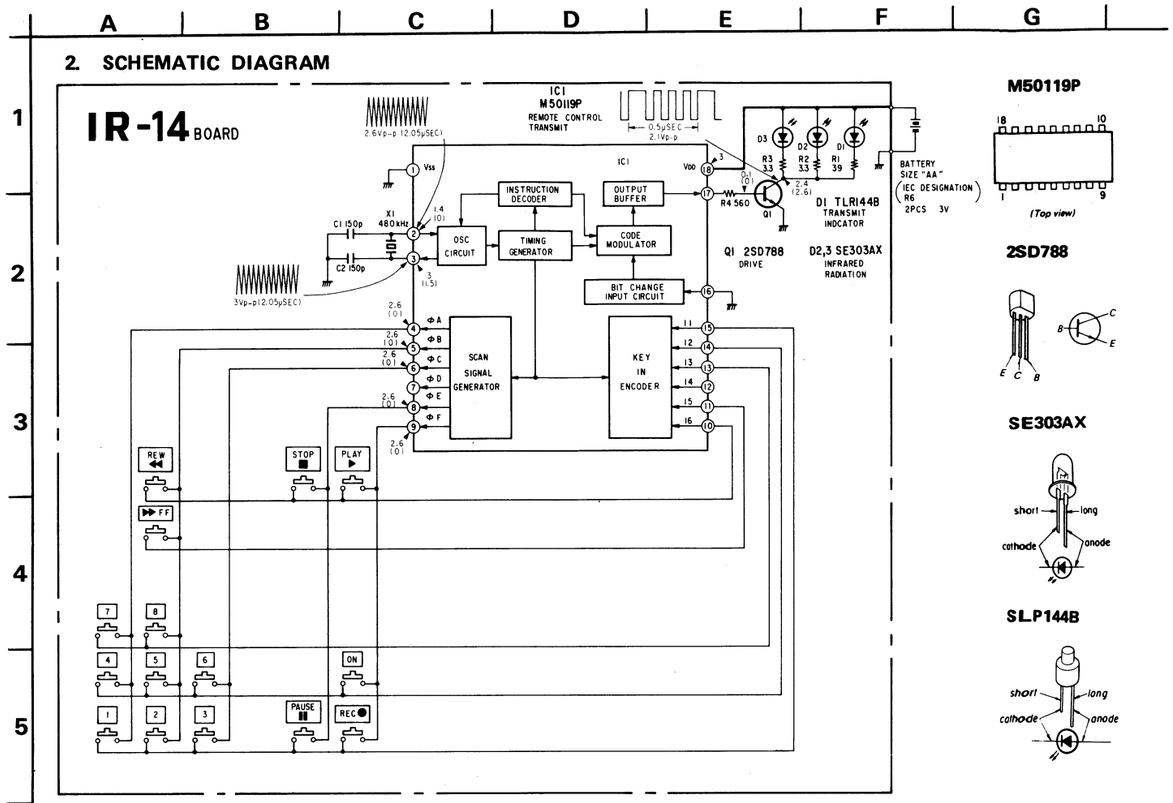

3. PRINTED WIRING BOARD

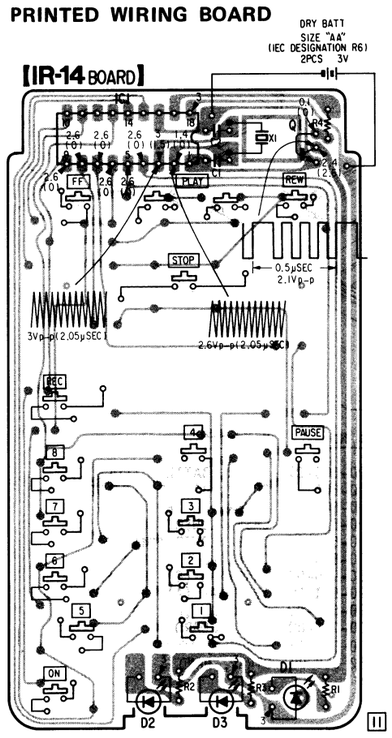

Note:
- All resistors are in ohms, 1/6 W unless otherwise noted.
- All capacitors are in μF (p:pF) unless otherwise noted. 50 V or less are not indicated except for electrolytic capacitors.
- ——: B + bus.

The voltage value is measured using a digital tester (10 MΩ/V).

When indicating parts by reference number, please include the board name.

- o— : indicates a lead wire mounted on the component side.
- •— : indicates a lead wier mounted on the printed side.
- ▒ : Conductor side
- ▒ : B + pattern

5. EXPLODED VIEW

NOTE:
- Items with no part number and no description are not stocked because they are seldom required for routine service.
- The construction parts of an assembled part are indicated with a collation number in the remark column.
- Items marked " ♦ " are not stocked since they are seldom required for routine service. Some delay should be anticipated when ordering these items.

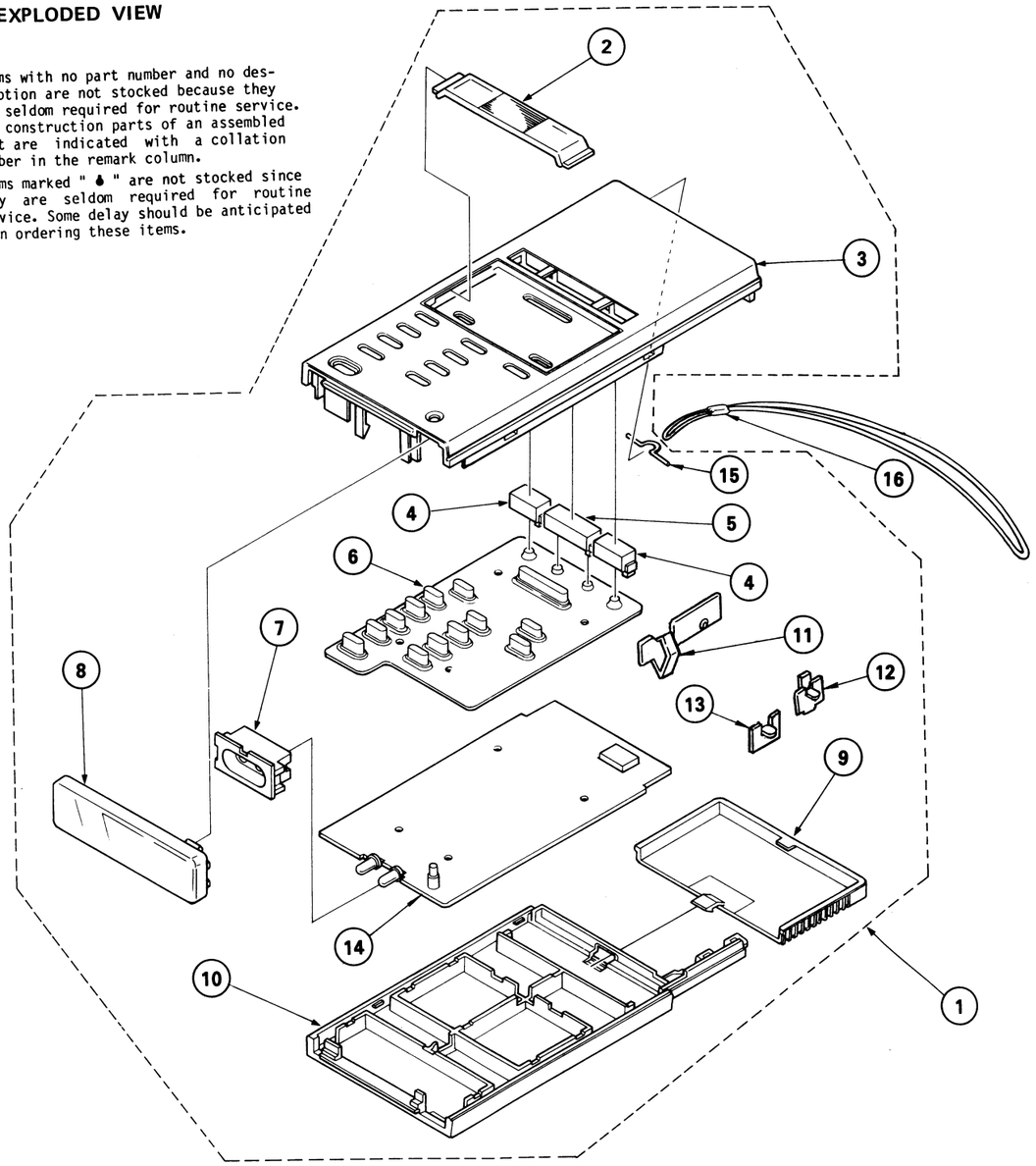

No.	Part No.	Description	Remark
1	A-6765-205-A	COMMANDER ASSY (GOLD)	2-16
	A-6765-291-A	COMMANDER ASSY (SILVER)	2-16
	A-6765-292-A	COMMANDER ASSY (RED)	2-16
2	2-290-603-00	CURSOR	
3	X-2290-618-1	CASING ASSY (GOLD)	
	X-2374-629-1	CASING ASSY (SILVER)	
	X-2290-628-1	CASING ASSY (RED)	
4	2-290-633-21	PUSH BUTTON (M)	
5	2-290-632-21	PUSH BUTTON (L)	
6	2-290-666-00	RUBBER (N), CONTACT	
7	2-298-402-00	MIRROR	
8	2-290-608-02	PLATE, FROSTED	
9	2-290-606-21	COVER, BATTERY (GOLD)	
	2-290-606-01	COVER, BATTERY (SILVER)	
	2-290-606-11	COVER, BATTERY (RED)	
10	2-290-611-21	CASE, LOWER (GOLD)	
	2-290-611-02	CASE, LOWER (SILVER)	
	2-290-611-11	CASE, LOWER (RED)	
11	4-350-925-00	TERMINAL (C), BATTERY	
12	2-290-601-02	TERMINAL (A), BATTERY	
13	2-290-602-02	TERMINAL (B), BATTERY	
14	♦:1-610-258-00	IR-14 BOARD	
15	♦ 2-290-630-00	STOPPER, HOLDER	
16	4-352-958-00	STRAP, HAND	

6. ELECTRICAL PARTS LIST

NOTE:
- All variable and adjustable resistors have characteristic curve B, unless otherwise noted.
- =>: Due to standardization, interchangeable replacements may be substituted for parts specified in the diagrams.
- Items marked " ♦ " are not stocked since they are seldom required for routine service. Some delay should be anticipated when ordering these items.

When indicating parts by reference number, please include the board name.

CAPACITORS
- MF : µF, PF : µµF

RESISTORS
- All resistors are in ohms
- F : nonflammable

COILS
- MMH : mH, UH : µH

Ref.No.	Part No.	Description				Remark
	♦:1-610-258-00	IR-14 BOARD **********				
	1-102-108-00	CERAMIC	150PF		10%	50V
	1-247-771-00	CARBON	3.3	5%	1/6W	
	1-247-797-00	CARBON	39	5%	1/6W	
	1-247-825-00	CARBON	560	5%	1/6W	
	1-527-476-00	OSCILLATOR, CERAMIC				
	2-290-601-00	TERMINAL (A), BATTERY				
	2-290-602-00	TERMINAL (B), BATTERY				
		DIODE				
D001	8-719-193-03	DIODE SE303AX				
D002	8-719-193-03	DIODE SE303AX				
D003	8-719-901-44	DIODE SLP144B				
		TRANSISTOR				
Q001	8-729-378-84	TRANSISTOR 2SD788				
		IC				
IC001	8-759-600-07	IC M50119P				